MINNESOTA DEPARTMENT OF TRANSPORTATION
WINONA COUNTY

CONSTRUCTION PLAN FOR BRIDGE NO. 85565 AND APPROACH GRADING

LOCATED 0.1 MILES WEST OF JCT. T.H. 74 ON C.S.A.H. 39 OVER THE MIDDLE FORK WHITEWATER RIVER, LOCATED 1.5 MILES S.W. OF THE CITY OF ELBA, MN (Geographical Description)

SEC. 16 TWP. 107 N R 10 W (Legal Description)

STATE AID PROJ. NO. 85–639–21

GROSS LENGTH	1200.00	FEET	0.227	MILES
BRIDGES–LENGTH	166.32	FEET	0.032	MILES
EXCEPTIONS–LENGTH		FEET		MILES
NET. LENGTH	1200.00	FEET	0.227	MILES

MN. PROJ. NO.

GOVERNING SPECIFICATIONS

THE 2005 EDITION OF THE MINNESOTA DEPARTMENT OF TRANSPORTATION "STANDARD SPECIFICATIONS FOR CONSTRUCTION" SHALL GOVERN.

LIST OF SHEETS

SHEET	TITLE
1	TITLE SHEET
2	GENERAL PLAN & ELEVATION
3	TYPICAL SECTION & SUPERELEVATION DIAGRAM
4	BRIDGE LAYOUT
5–7	WEST ABUTMENT DETAILS
8–10	EAST ABUTMENT DETAILS
11–13	PIER 1 DETAILS
14–16	PIER 2 DETAILS
17–19	SUPERSTRUCTURE DETAILS
20	END DIAPHRAGM DETAILS
21	PRESTRESSED CONCRETE BEAM DETAILS
22	CONCRETE BARRIER (TYPE F, TL–4)
23	CONDUIT SYSTEM (TELEPHONE)
24–27	MISC. BRIDGE DETAILS
28	BRIDGE SURVEY
29	BRIDGE SURVEY ~ PLAN & PROFILE
30	BRIDGE SURVEY ~ SOIL BORINGS
31–32	GUARDRAIL DETAILS
33–38	APPROACH GRADING
39	TEMPORARY EROSION CONTROL
40–41	TRAFFIC CONTROL

THIS PLAN CONTAINS 41 SHEETS.

PLAN SYMBOLS

COUNTY LINE
TOWNSHIP OR RANGE LINE
SECTION LINE
QUARTER LINE
SIXTEENTH LINE
EXISTING R/W
NEW R/W
TEMP EASE
RAILROAD R/W
UNSURFACED RD. OR SHLD.
EDGE OF LAKE
SWAMP BOUNDARY
MISCELLANEOUS BOUNDARY
CORPORATE OR CITY LIMITS
VACATED PLATTED PROPERTY
RECREATIONAL TRAIL
ALIGNMENT STATIONS (110, 112)
ALIGNMENT POINTS
RIVER OR CREEK
DRAINAGE DITCH (SIZE)
BRIDGE
RAILROAD (SINGLE TRACK)
RR CROSSING PAVEMENT MARKING
RR CROSSING GATE
RR CROSSBUCK SIGN
RR CROSSBUCK SIGN W/LIGHTS
BARBED WIRE FENCE (X)
CHAIN LINK FENCE (XC)
WOVEN WIRE, COMBINATION WOVEN AND BARB (XW)
WOOD FENCE
BILLBOARD
RETAINING WALL
GUARDRAIL (CABLE)
GUARDRAIL (PLATE BEAM)
DRAIN TILE
CULVERT
CULVERT WITH APRONS
WOODS OR BRUSH, NURSERY
DECIDUOUS TREES
CONIFER (EVERGREEN) TREES
HEDGE
BUSH OR SHRUB
STUMP
SWAMP OR MARSH
MONUMENT (CI,ACT,ACP,BCP,...)
CONCRETE OR STONE MONUMENT
IRON PIPE
IRON PIN OR REBAR
IRON PIN WITH BRASS DISK
NAIL, PK NAIL, SPIKE, SFP, T–BAR, ...
VERTICAL CONTROL (B.M.)
HORIZONTAL CONTROL
POWER POLE
LIGHT POLE
LIGHT AND TELEPHONE POLE
LIGHT, TELEPHONE AND POWER POLE
GUY POLE (GP)
POLE ANCHOR
TELEPHONE POLE
TELEPHONE AND POWER POLE
UNDERGROUND CABLE PEDESTAL (PED)
TELEPHONE MANHOLE (VAULT) (MH)
ELECTRIC CABLE IN CONDUIT (P)
TELEPHONE CABLE IN CONDUIT (T)
BURIED ELECTRIC CABLE (P–BUR)
BURIED TELEPHONE CABLE (T–BUR)
GAS LINE (G)
WATER LINE (W)
VALVE
FIRE HYDRANT
WATER MANHOLE
WELL (WELL)
LAWN SPRINKLER HEAD
MANHOLE (MH)
CATCH BASIN (CB)
SEPTIC TANK (SEPTIC TANK)
FORCE MAIN LIFT STA. (LIFT)
SEWER LINE
PERMANENT BARRICADE
TRAFFIC SIGNAL LIGHT
HAND HOLE
ENTRANCE
BUILDING (NUMBER, 1–S–F)
SATELLITE DISH
STEEL TOWER (TOWER)
FLAG POLE (F.P.)

PROJECT LOCATION
Outline Map of Minnesota showing location of the County within the State.

WINONA COUNTY

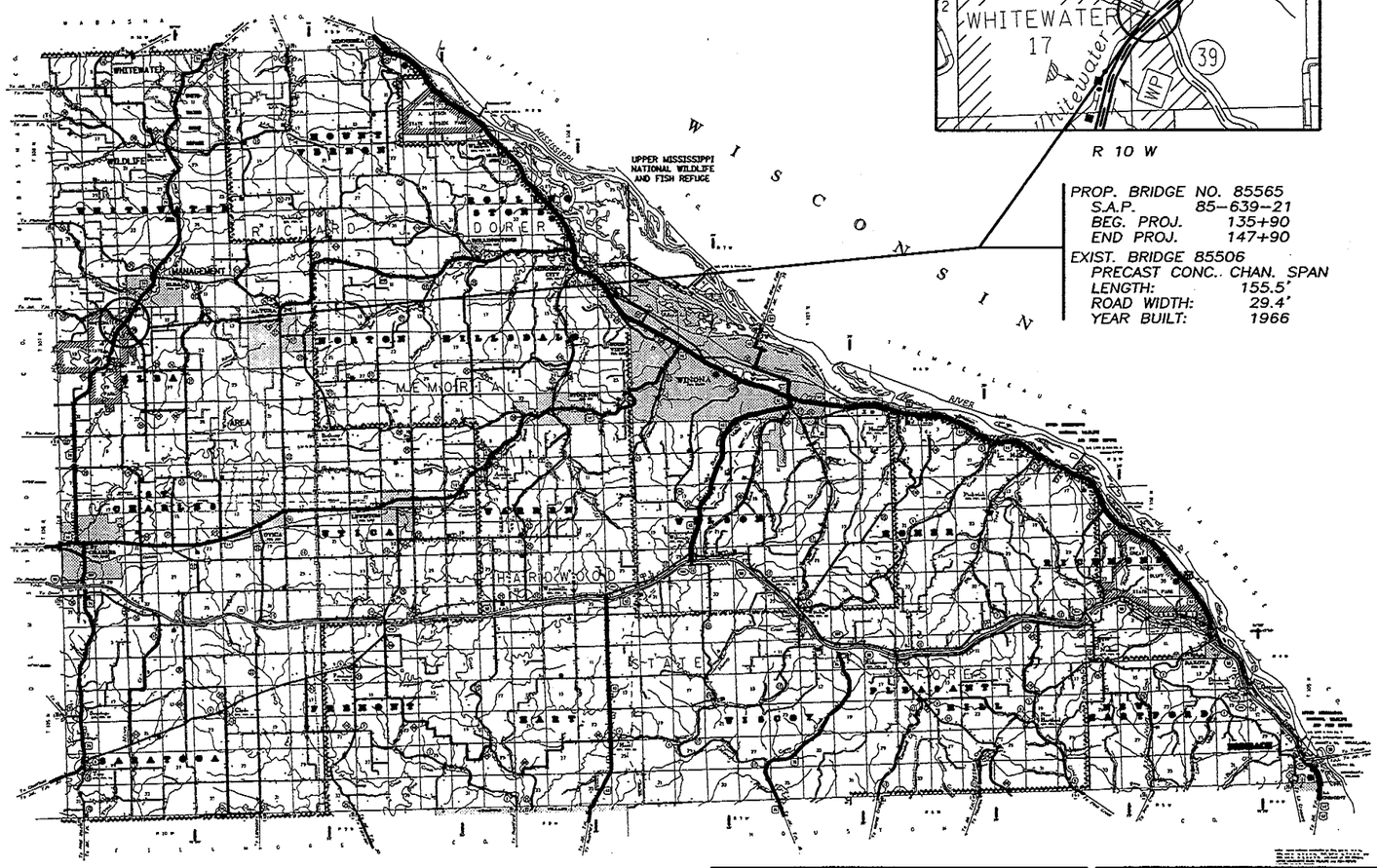

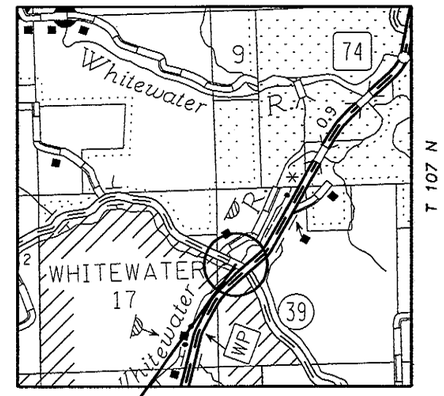

PROP. BRIDGE NO. 85565
S.A.P. 85–639–21
BEG. PROJ. 135+90
END PROJ. 147+90

EXIST. BRIDGE 85506
PRECAST CONC. CHAN. SPAN
LENGTH: 155.5'
ROAD WIDTH: 29.4'
YEAR BUILT: 1966

SCALE: 0 2 4 5 MILES

DESIGN DESIGNATION

≤ N18 20
R VALUE
ADT 576 (2008)
PROJ. ADT 806 (2028)
PROJ. HCADT
SOIL FACTOR 100
9 TON DESIGN

Design Speed 40 MPH
Based on 305' Stopping Sight Distance
Height of eye 3.5'
Height of object 2.0 FT. (Crest Curve)
Height of object 0.5' (Sag Curve)
Design Speed not achieved at:
STA. TO STA. MPH

Ronald Dokken — RONALD DOKKEN
DESIGN ENGINEER: I HEREBY CERTIFY THAT THIS PLAN (SHEETS 1–32) WAS PREPARED BY ME OR UNDER MY DIRECT SUPERVISION AND THAT I AM A DULY REGISTERED PROFESSIONAL ENGINEER UNDER THE LAWS OF THE STATE OF MINNESOTA.

DATE 7-15-2008 LICENSE NUMBER 13931

David F. Thramer — DATE 7-16-08
APPROVED: COUNTY ENGINEER

Kevin Western — DATE 8/4/08
RECOMMEND FOR APPROVAL: STATE BRIDGE ENGINEER

Andy Schmitz — DATE July 21, 2008
ASST DISTRICT STATE AID ENGINEER: REVIEWED FOR COMPLIANCE WITH STATE–AID RULES/POLICY

Patt J. Loken — DATE 8/6/08
APPROVED FOR STATE–AID FUNDING: STATE–AID ENGINEER

ERICKSON ENGINEERING
Consulting Engineers

STATE AID PROJ. NO. 85–639–21

STATE PROJ. NO.

SHEET NO. 1 OF 41 SHEETS

B.M. ELEV. 782.04 (N.A.V.D. 88)

LOCATION: MnDOT MONUMENT 8508K
IN N.E. ABUTMENT CORNER
OF EXISTING BR. 85506

DESIGN DATA

2007 AND CURRENT INTERIM AASHTO LRFD BRIDGE DESIGN SPECIFICATIONS LOAD AND RESISTANCE FACTOR DESIGN METHOD - HL-93 LIVE LOAD
DEAD LOAD INCLUDES 20 PSF DEAD LOAD ALLOWANCE FOR FUTURE WEARING COURSE MODIFICATIONS.
MAXIMUM ALLOWABLE DESIGN STRESSES:
REINFORCED CONCRETE:
$f'c$ = 4000 PSI n = 8
fy = 60000 PSI REINFORCEMENT
PRESTRESSED CONCRETE:
$f'c$ = 7500 PSI n = 1
$f'pu$ = 270000 PSI STRANDS
STRUCTURAL STEEL:
fy = 36000 PSI SPEC. 3306
DECK AREA = 5.877 S.F. DESIGN SPEED = 40 M.P.H.
CURRENT A.D.T. = 576 (2008)
PROJ. A.D.T. = 806 (2028)
OPERATING RATING = HS 46

HORIZONTAL CURVE #1 DATA

P.C. STA. 139+19.70
P.I. STA. 140+23.95
P.T. STA. 141+25.36
T = 104.25'
R = 510.00'
L = 205.66'
Δ = 23°06'17" RT.

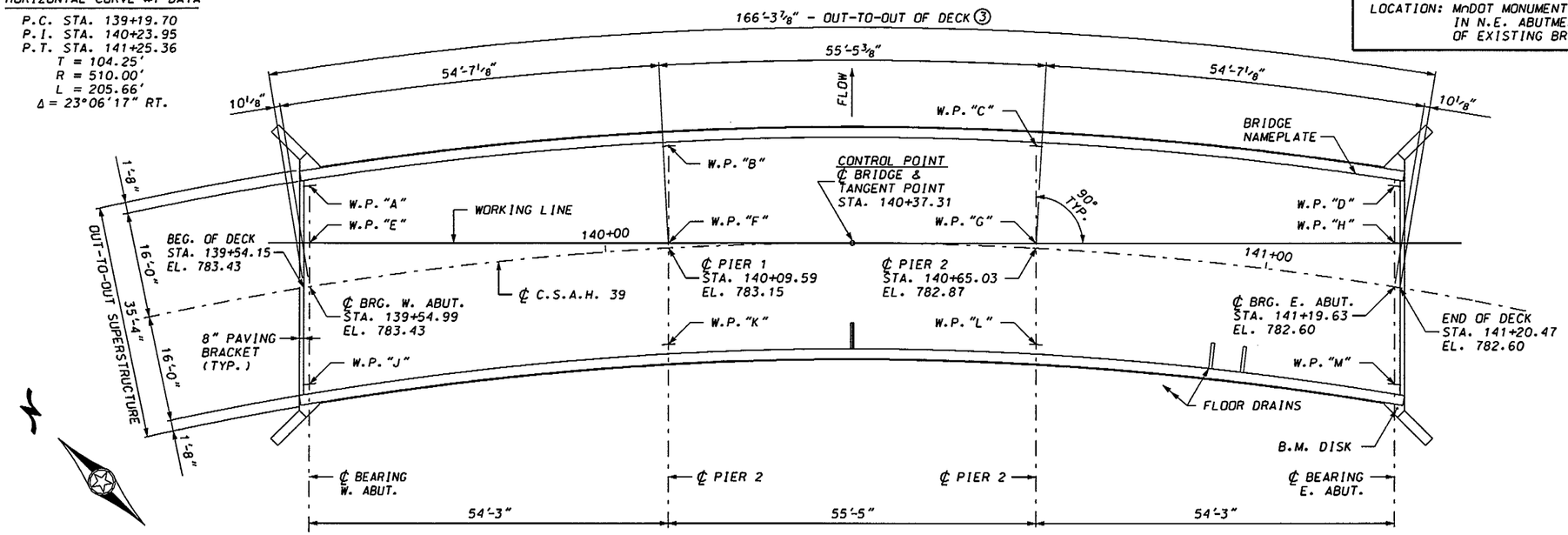

PLAN
SCALE: 0' 10'

LIST OF SHEETS

NO.	TITLE
1	TITLE SHEET
2	GENERAL PLAN & ELEVATION
3	TYPICAL SECTION & SUPERELEVATION DIAGRAM
4	BRIDGE LAYOUT
5-7	WEST ABUTMENT DETAILS
8-10	EAST ABUTMENT DETAILS
11-13	PIER 1 DETAILS
14-16	PIER 2 DETAILS
17-19	SUPERSTRUCTURE DETAILS
20	END DIAPHRAGM DETAILS
21	PRESTRESSED CONCRETE BEAM DETAILS
22	CONCRETE BARRIER (TYPE F, TL-4)
23	CONDUIT SYSTEM (TELEPHONE)
24-27	MISC. BRIDGE DETAILS
28	BRIDGE SURVEY
29	BRIDGE SURVEY - PLAN & PROFILE
30	BRIDGE SURVEY - SOIL BORINGS
31-32	GUARDRAIL DETAILS
33-38	APPROACH GRADING
39	TEMPORARY EROSION CONTROL
40-41	TRAFFIC CONTROL

120' VERTICAL CURVE DATA

P.V.C. STA. 138+30, EL. 783.02
P.V.I. STA. 138+90, EL. 783.75
P.V.T. STA. 139+50, EL. 783.45
G_1 = +1.21%
M = -0.26'

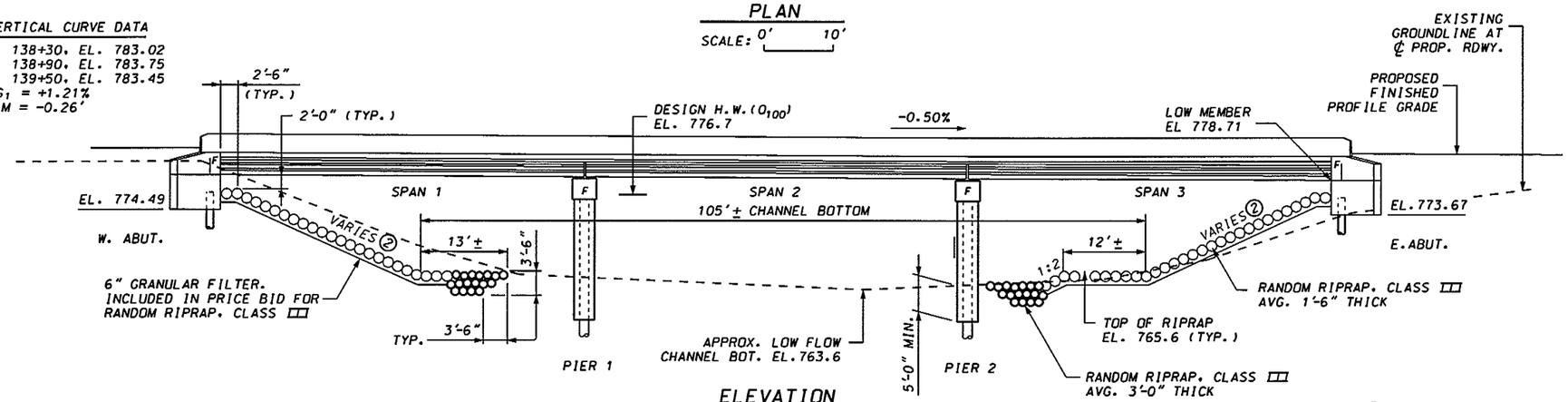

ELEVATION
SCALE: 0' 10'

(1) EXIST. BR. 85506, STA. 140+47 - NON-PARTICIPATING
(2) 1:2.2 UPSTREAM & 1:2.0 DOWNSTREAM
(3) MEASURED ALONG ℄ ROADWAY.
(4) REFER TO SHEET 35 FOR TRAFFIC BARRIER LAYOUT

NOTE:
ABUTMENT PILES ARE TO BE 12" C.I.P. CONCRETE PILING WITH PILE POINTS.
PIER PILES ARE TO BE 12" C.I.P. CONCRETE PILING WITH PILE POINTS.

SCHEDULE OF QUANTITIES FOR THE ENTIRE BRIDGE

ITEM NO.	2021.501	2401.501	2401.512	2401.513	2401.541	2401.601	2401.601	2401.601	2402.521	2402.546	2402.590	2402.595	2405.502
ITEM	MOBILIZATION	STRUCTURAL CONCRETE (3Y43)	BRIDGE SLAB CONCRETE (3Y33A)	TYPE F (TL-4) RAILING CONCRETE (3Y46A)	REIN-FORCEMENT BARS (EPOXY COATED)	SLOPE PREPARATION	FOUNDATION PREPARATION PILE BENT PIERS	STRUCTURE EXCAVATION (2)	STRUCTURAL STEEL (3306)	FLOOR DRAIN TYPE B706 MODIFIED	ELASTOMERIC BEARING PAD TYPE 1	BEARING ASSEMBLY	PRESTRESSED CONCRETE BEAMS 27M
QUANTITY	1	224 (P)	5887 (P)	335 (P)	58070 (P)	1	1	1	530 (P)	3	8	16	660 (P)
UNIT	LUMP SUM	CU. YD.	SQ. FT.	LIN. FT.	POUND	LUMP SUM	LUMP SUM	LUMP SUM	POUND	EACH	EACH	EACH	LIN.FT.

ITEM NO.	2442.501	2452.507	2452.508	2452.519	2452.519	2452.602	2511.501	2545.509	2554.501	2554.501	2554.523	2563.601
ITEM	REMOVE EXISTING BRIDGE (1)	C.I.P. CONCRETE PILING DELIVERED 12"	C.I.P. CONCRETE PILING DRIVEN 12"	C.I.P. CONCRETE TEST PILES, 70 FT. LONG 12"	C.I.P. CONCRETE TEST PILES, 80 FT. LONG 12"	PILE POINTS 12"	RANDOM RIPRAP, CLASS III	CONDUIT SYSTEM (TELEPHONE)	TRAFFIC BARRIER DESIGN SPECIAL (4)	TRAFFIC BARRIER DESIGN B8338	END TREATMENT ENERGY ABSORBING TERMINAL (4)	TRAFFIC CONTROL
QUANTITY	1	1460	1460	2	2	26	410	1	100	100	4	1
UNIT	LUMP SUM	LIN. FT.	LIN. FT.	EACH	EACH	EACH	CU. YD.	LUMP SUM	LIN. FT.	LIN. FT.	EACH	LUMP SUM

PLANS PREPARED BY:
ERICKSON ENGINEERING
9330 JAMES AVENUE SOUTH
BLOOMINGTON, MN 55431

APPROVED: David F. Thomas
COUNTY ENGINEER
WINONA COUNTY
DATE: 7-16-2008

I HEREBY CERTIFY THAT THIS PLAN WAS PREPARED BY ME OR UNDER MY DIRECT SUPERVISION AND THAT I AM A DULY LICENSED PROFESSIONAL ENGINEER UNDER THE LAWS OF THE STATE OF MINNESOTA.

Ronald Dokken
RONALD DOKKEN
DATE: 7-15-2008 LIC. NO. 13931

C.S.A.H. 39 WINONA COUNTY
MINNESOTA DEPARTMENT OF TRANSPORTATION

BRIDGE NO. 85565

LOCATED 0.1 MILE WEST OF JCT. T.H. 74 ON C.S.A.H. 39 OVER THE MIDDLE FORK WHITEWATER RIVER

55'-55'-55' PRESTR. CONC. BEAM SPAN
32 FT. ROADWAY, 0° SKEW
SPAN IDENTIFICATION NO. 501

GENERAL PLAN & ELEVATION

SEC. 16 TWP. 107 N R 10 W
TOWNSHIP: ELBA
COUNTY: WINONA

APPROVED: Kevin Western
FOR STATE BRIDGE ENGINEER
DATE: 8/4/08

S.A.P. 85-639-21
SHEET 2 OF 41 SHEETS

DES.: RLD	DRN.: BDM	85565
CHK.: CSK	CHK.: RLD	

CONSTRUCTION NOTES

THE 2005 EDITION OF THE MINNESOTA DEPARTMENT OF TRANSPORTATION "STANDARD SPECIFICATIONS FOR CONSTRUCTION" SHALL GOVERN.

THE FIRST TWO DIGITS OF EACH BAR MARK INDICATE THE BAR SIZE IN MILLIMETERS. BARS MARKED WITH THE SUFFIX " E" SHALL BE EPOXY COATED.

THE SUBSURFACE UTILITY INFORMATION IN THIS PLAN IS UTILITY QUALITY LEVEL D. THIS UTILITY QUALITY LEVEL WAS DETERMINED ACCORDING TO THE GUIDELINES OF CI/ASCE 38-02, ENTITLED "STANDARD GUIDELINES FOR THE COLLECTION AND DEPICTION OF EXISTING SUBSURFACE UTILITY DATA."

ENGINEER IN THE FIELD SHALL VERIFY PROPER POSITIONING OF THE BRIDGE PRIOR TO COMMENCEMENT OF CONSTRUCTION. IF THE BRIDGE POSITIONING IS NOT COMPATIBLE WITH THE STREAM AND THE EXISTING STRUCTURE WHEN STAKING IS COMPLETED, THE SEALING ENGINEER SHALL BE NOTIFIED.

IF STATIONING IS CHANGED, THE REVISED PLANS WILL BE SUBMITTED TO THE OWNER AND STATE AID BRIDGE OFFICE.

THE PILE LOADS SHOWN IN THE PLANS AND THE CORRESPONDING NOMINAL PILE BEARING RESISTANCE (R_n) WERE COMPUTED USING LRFD METHODOLOGY. PILE BEARING RESISTANCE DETERMINED IN THE FIELD SHALL INCORPORATE THE METHODS AND/OR FORMULAS DESCRIBED IN THE SPECIAL PROVISIONS.

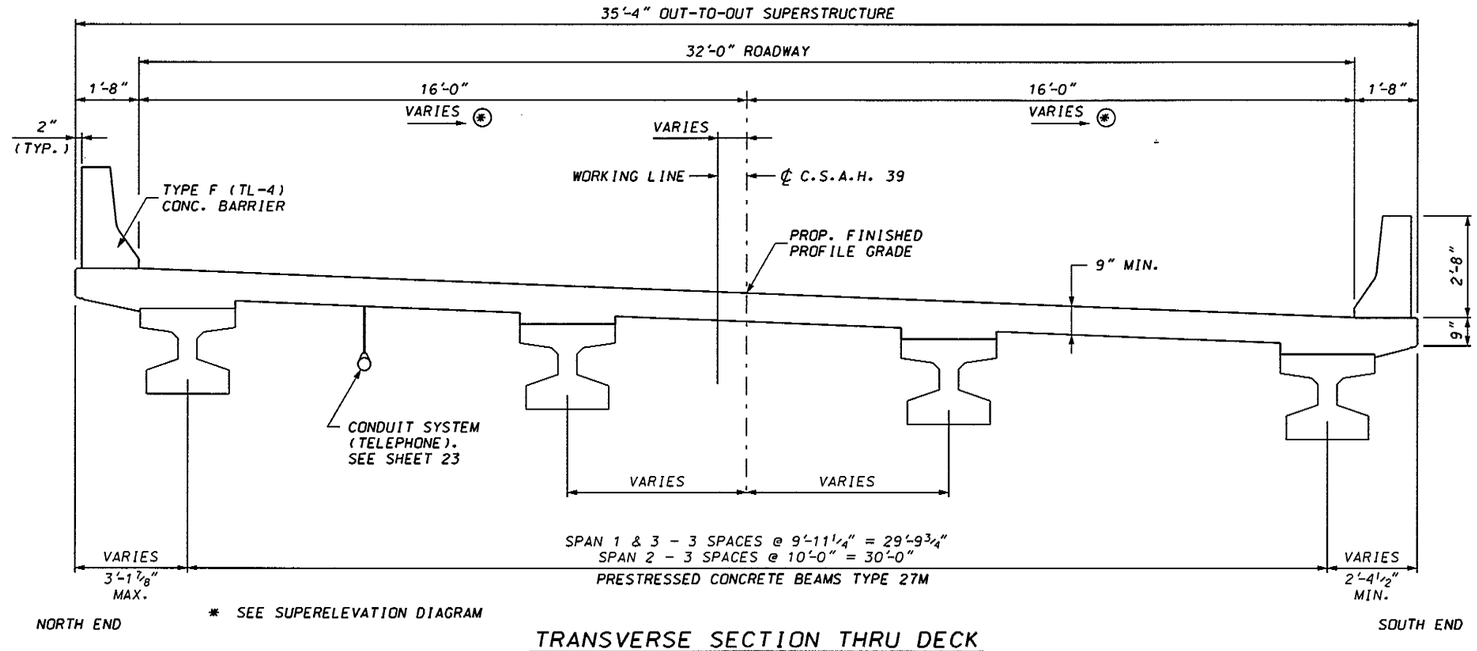

TRANSVERSE SECTION THRU DECK

SCALE: 0' 2'

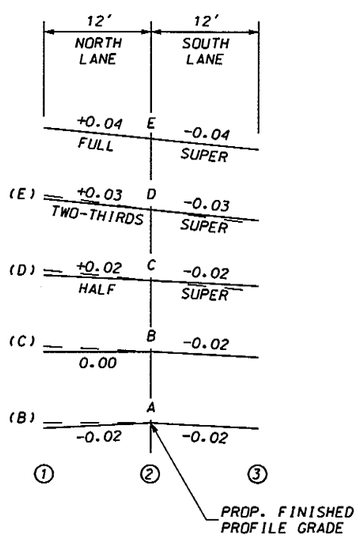

SUPERELEVATION DIAGRAM ACROSS BRIDGE

HORIZONTAL CURVE #1 DATA

P.C. STA. 139+19.70
P.I. STA. 140+23.95
P.T. STA. 141+25.36
T = 104.25'
R = 510.00'
L = 205.66'
Δ = 23°06'17" RT.

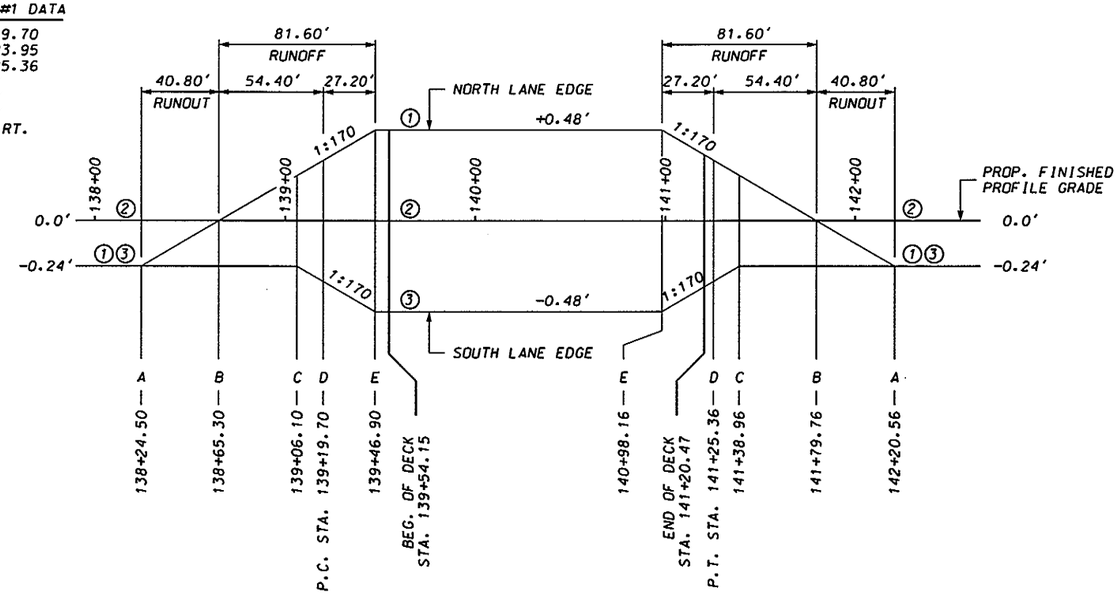

SUPERELEVATION DIAGRAM

CERTIFIED BY Ronald Dokken
PROFESSIONAL ENGINEER/RONALD DOKKEN
LIC. NO. 13931 7/15/2008

MINNESOTA DEPARTMENT OF TRANSPORTATION

BRIDGE NO. 85565
TYPICAL SECTION & SUPERELEVATION DIAGRAM

APPROVED:

S.A.P. 85-639-21
SHEET 3 OF 41 SHEETS

DES.	RLD	DRN.	BDM	85565
CHK.	CSK	CHK.	RLD	

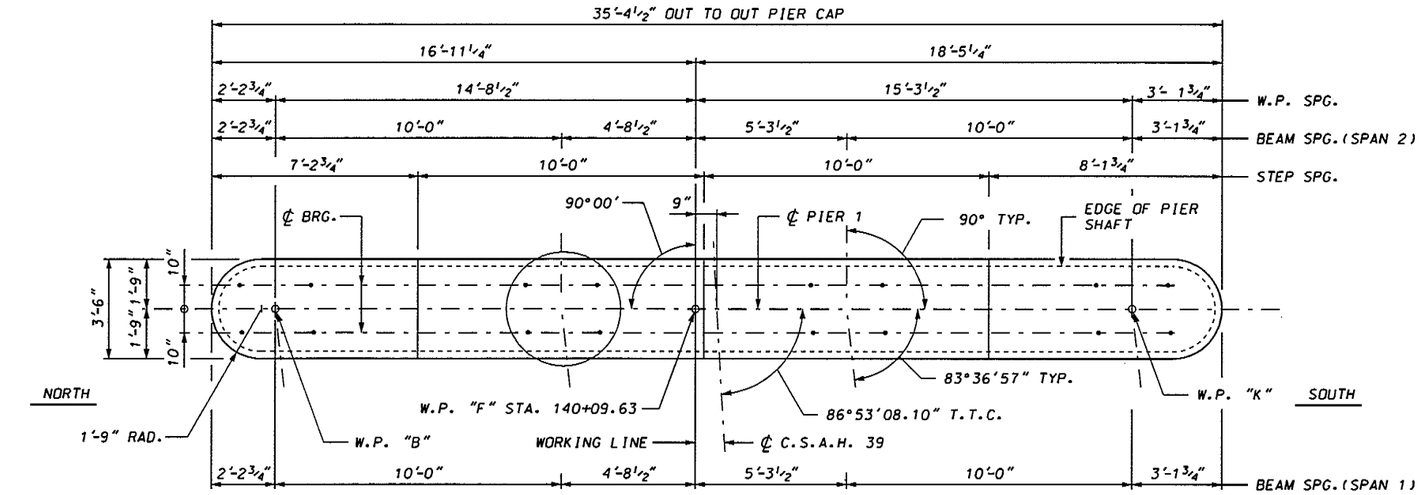

CAP PLAN

SCALE: 0' 2'

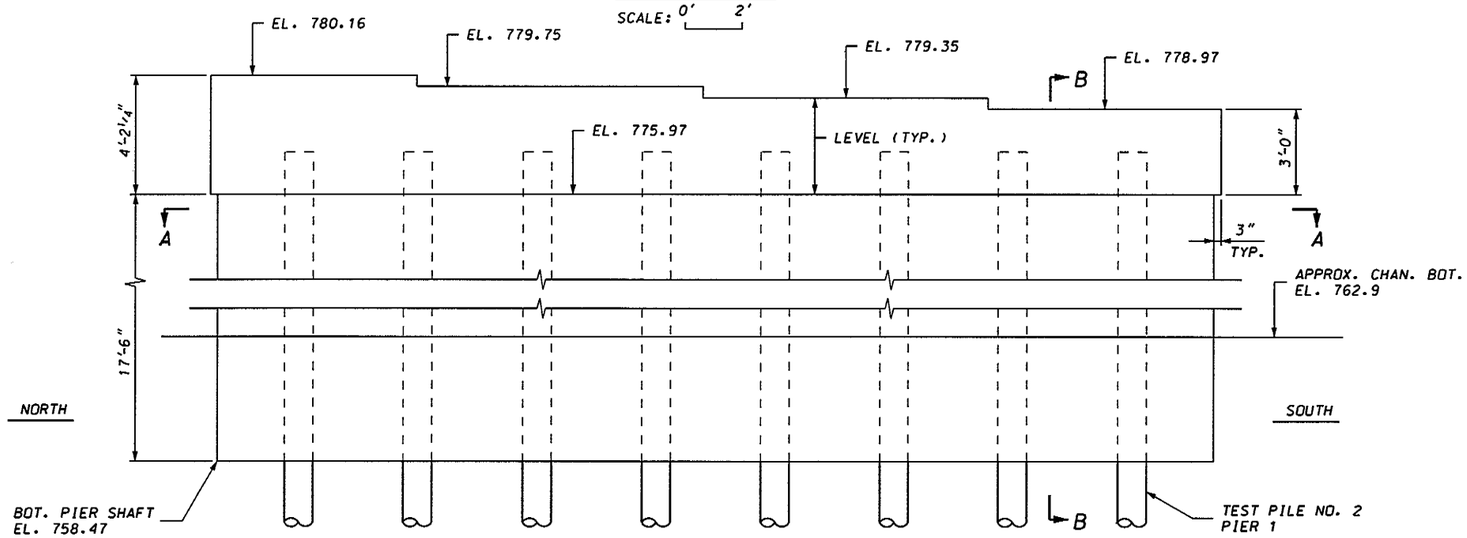

ELEVATION

SCALE: 0' 2'

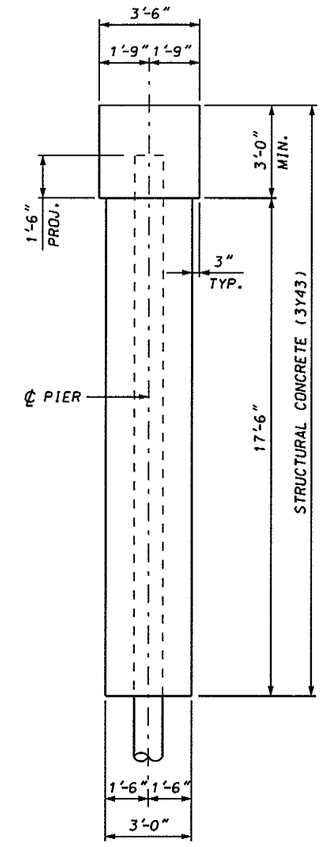

SECTION B-B

SCALE: 0' 2'

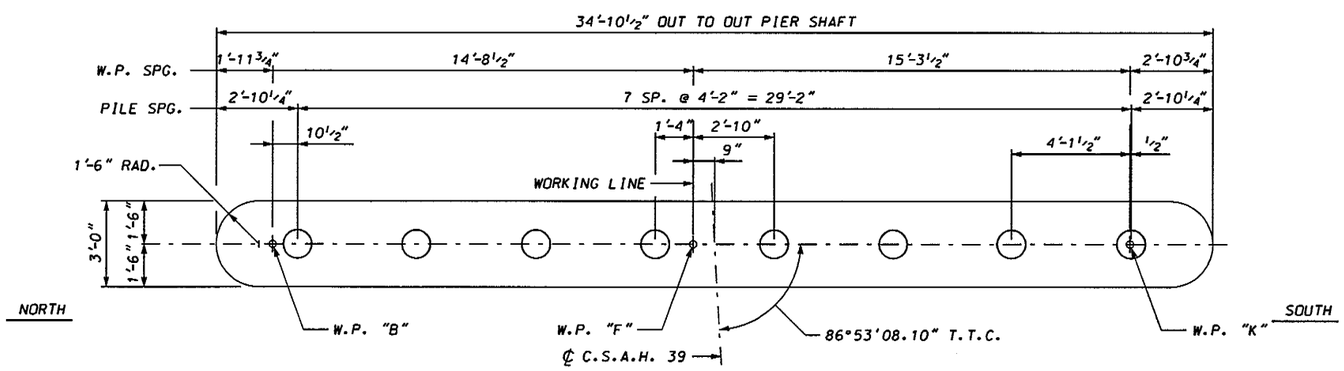

SECTION A-A

SCALE: 0' 2'

PIER 1 COMPUTED PILE LOAD - TONS/PILE	
FACTORED DEAD LOAD	67.1
FACTORED LIVE LOAD	21.4
✱FACTORED DESIGN LOAD	88.5

✱BASED ON STRENGTH I LOAD COMBINATION

PIER 1 REQUIRED NOMINAL PILE BEARING RESISTANCE R_n - TONS/PILE		
FIELD CONTROL METHOD	φ_{dyn}	✱R_n
MN/DOT NOMINAL RESISTANCE FORMULA	0.40	221.2
PDA	0.65	136.2

✱R_n = (FACTORED DESIGN LOAD) / φ_{dyn}

PILE NOTES

7 - C.I.P. CONC. PILES. EST. LENGTH 70'
1 - C.I.P. CONC. TEST PILES. 80' LONG
8 - C.I.P. CONC. PILES REQ.D FOR PIER 1

ALL PIER PILES SHALL HAVE A NOMINAL DIAMETER OF 12".

ALL PIER PILES SHALL HAVE PILE POINTS. SEE SPECIAL PROVISIONS.

PILE SPACING SHOWN IS AT BOTTOM OF SHAFT.

SEE DETAIL B201 FOR SPLICES.

SEE SURVEY SHEET FOR TEST PILE LOCATIONS.

ALL PIER PILES SHALL BE DRIVEN TO ELEVATION 746.9 OR BELOW.

NOTE:

(1) SEE SHEET 13 FOR ANCHOR ROD LAYOUT DETAIL.

CERTIFIED BY Ronald Dokken
PROFESSIONAL ENGINEER/RONALD DOKKEN
LIC. NO. 13931 7/15/ 2008

MINNESOTA DEPARTMENT OF TRANSPORTATION

BRIDGE NO. 85565

PIER 1 DETAILS

APPROVED:

S.A.P. 85-639-21

SHEET 11 OF 41 SHEETS

DES.	RLD	DRN.	BDM	85565
CHK.	CSK	CHK.	RLD	

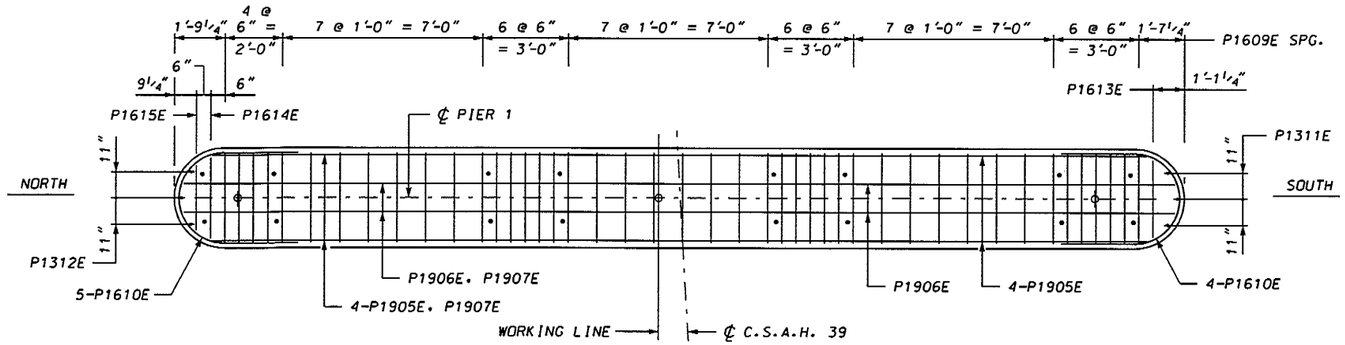

CAP PLAN

SCALE: 0' 2'

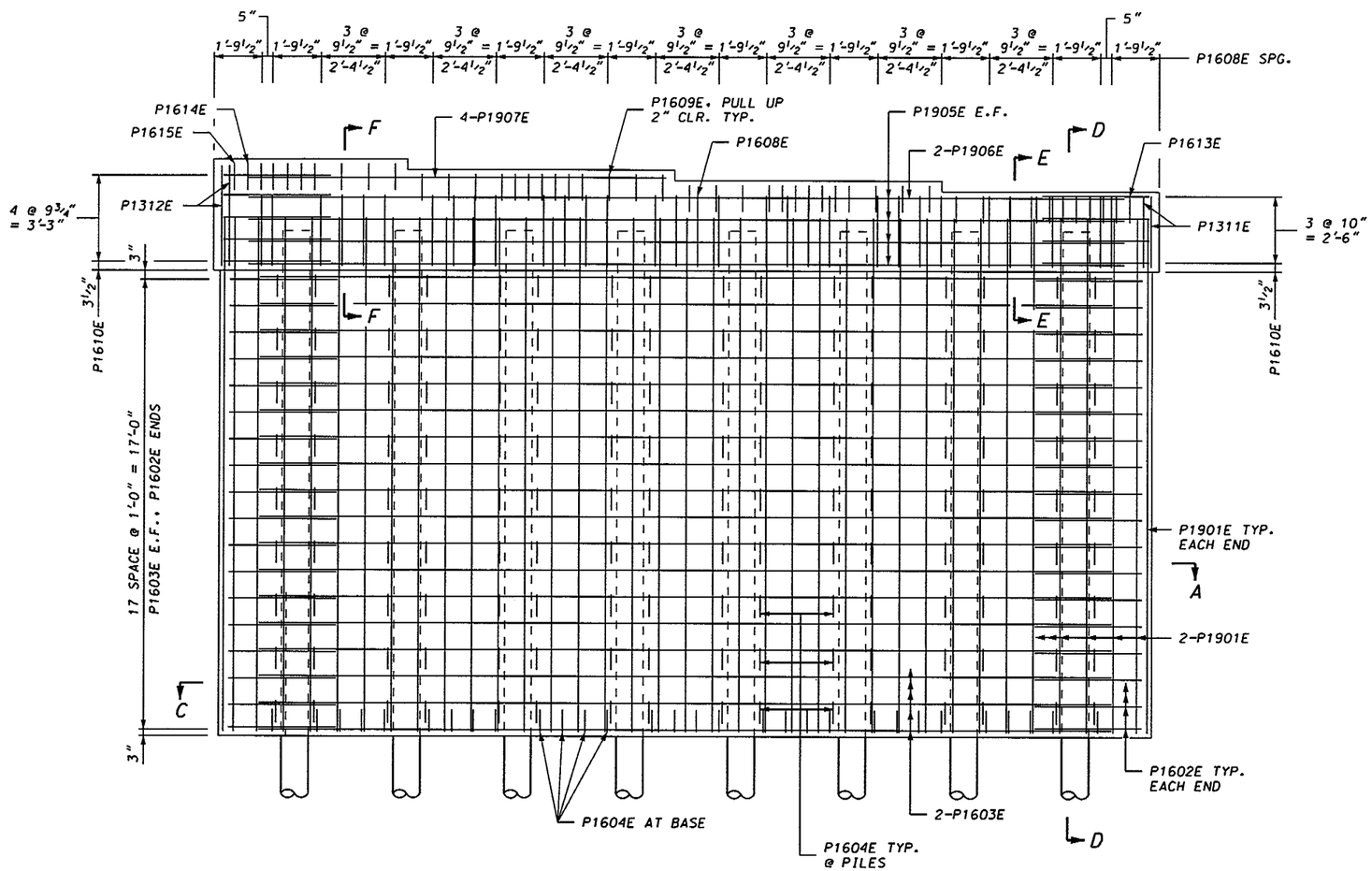

ELEVATION

SCALE: 0' 2'

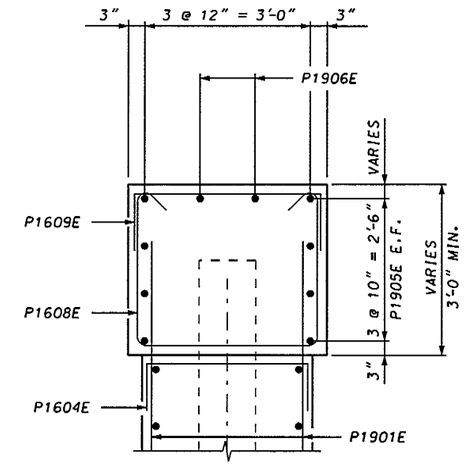

SECTION E-E

SCALE: 0' 1'

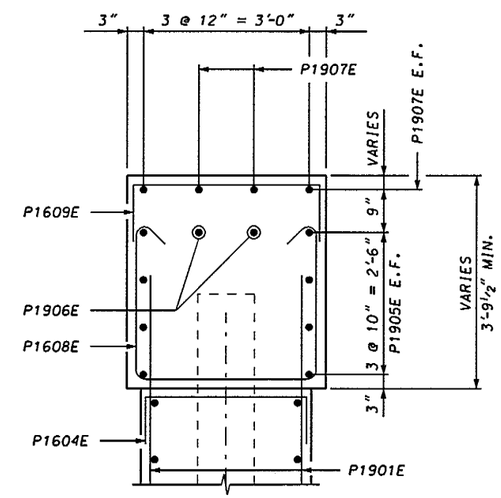

SECTION F-F

SCALE: 0' 1'

CERTIFIED BY Ronald Dokken
PROFESSIONAL ENGINEER/RONALD DOKKEN
LIC. NO. 13931 7/15/2008

MINNESOTA DEPARTMENT OF TRANSPORTATION

BRIDGE NO. 85565

PIER 1 DETAILS

APPROVED:

S.A.P. 85-639-21

SHEET 12 OF 41 SHEETS

DES.	RLD	DRN.	BDM	85565
CHK.	CSK	CHK.	RLD	

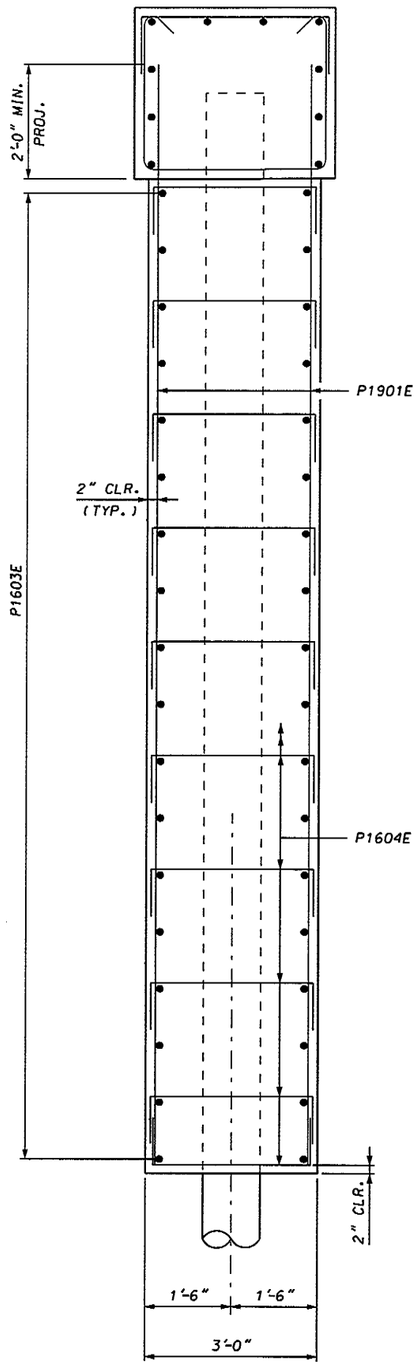

SECTION D-D

SCALE: 0' 1'

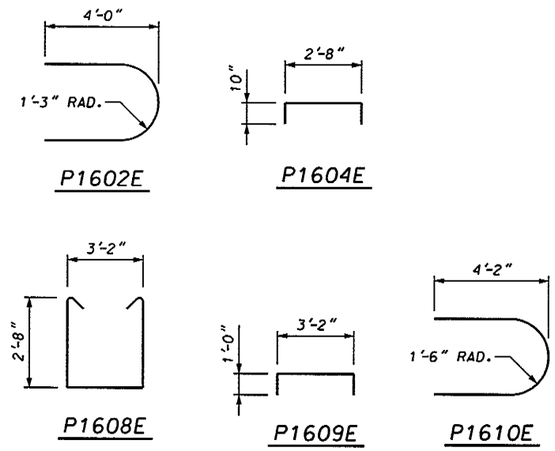

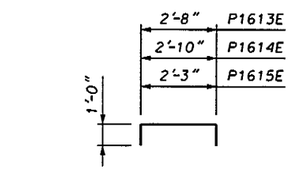

P1613E, P1614E & P1615E

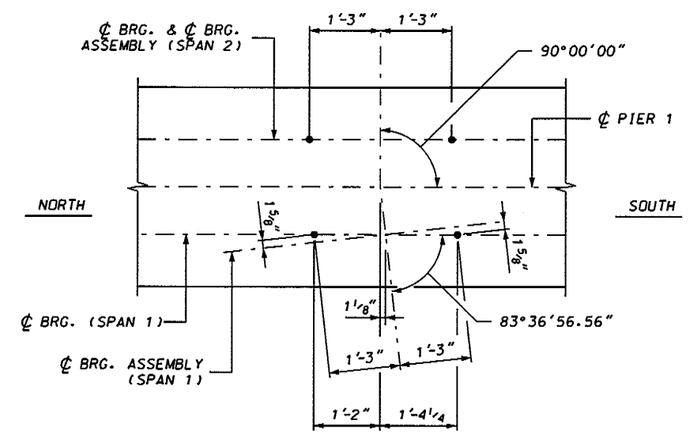

ANCHOR ROD DETAIL

SCALE: 0' 1'

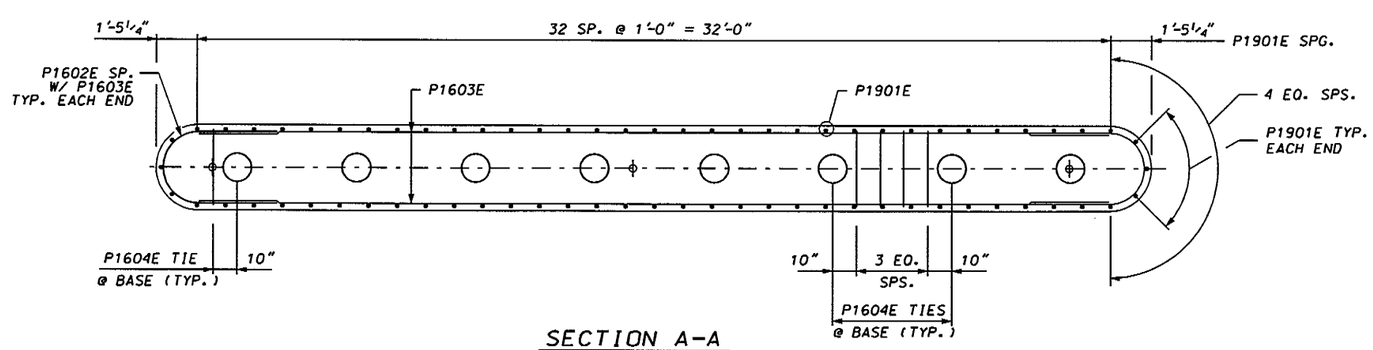

SECTION A-A

SCALE: 0' 2'

BILL OF REINFORCEMENT - PIER 1

BAR	NO.	LENGTH	SHAPE	LOCATION
P1901E	72	19'-4"	STRT.	SHAFT - VERTICAL
P1602E	36	9'-6"	BENT	SHAFT - HORIZONTAL END
P1603E	36	31'-10"	STRT.	SHAFT - LONGITUDINAL
P1604E	174	4'-4"	BENT	SHAFT - TIE
P1905E	8	32'-2"	STRT.	CAP - LONGITUDINAL
P1906E	2	34'-8"	STRT.	CAP - LONGITUDINAL
P1907E	4	15'-7"	STRT.	CAP - LONGITUDINAL
P1608E	32	9'-5"	BENT	CAP - STIRRUP
P1609E	44	5'-2"	BENT	CAP - TIE
P1610E	9	10'-0"	BENT	CAP - TIE AT ENDS
P1311E	3	2'-8"	STRT.	CAP - VERT. @ END
P1312E	3	3'-10"	STRT.	CAP - VERT. @ END
P1613E	1	4'-8"	BENT	CAP - TIE AT ENDS
P1614E	1	4'-10"	BENT	CAP - TIE AT ENDS
P1615E	1	4'-3"	BENT	CAP - TIE AT ENDS

SUMMARY OF QUANTITIES - PIER 1

	STRUCTURAL CONCRETE (3Y43)	83 CU. YD.
	REINFORCEMENT BARS, EPOXY COATED	5690 POUND
1	C.I.P. CONCRETE PILING DELIVERED, 12"	490 LIN. FT.
1	C.I.P. CONCRETE PILING DRIVEN, 12"	490 LIN. FT.
	C.I.P. CONCRETE TEST PILE, 80 FT. LONG, 12"	1 EACH
2	PILE POINTS 12"	8 EACH
2	FOUNDATION PREPARATION PILE BENT PIERS	0.5 LUMP SUM

1 DOES NOT INCLUDE TEST PILES

2 SEE SPECIAL PROVISIONS

CERTIFIED BY Ronald Dokken
PROFESSIONAL ENGINEER/RONALD DOKKEN
LIC. NO. 13931 7/15/ 2008

MINNESOTA DEPARTMENT OF TRANSPORTATION

BRIDGE NO. 85565

PIER 1 DETAILS

APPROVED:

S.A.P. 85-639-21

SHEET 13 OF 41 SHEETS

DES.	RLD	DRN.	BDM	85565
CHK.	CSK	CHK.	RLD	

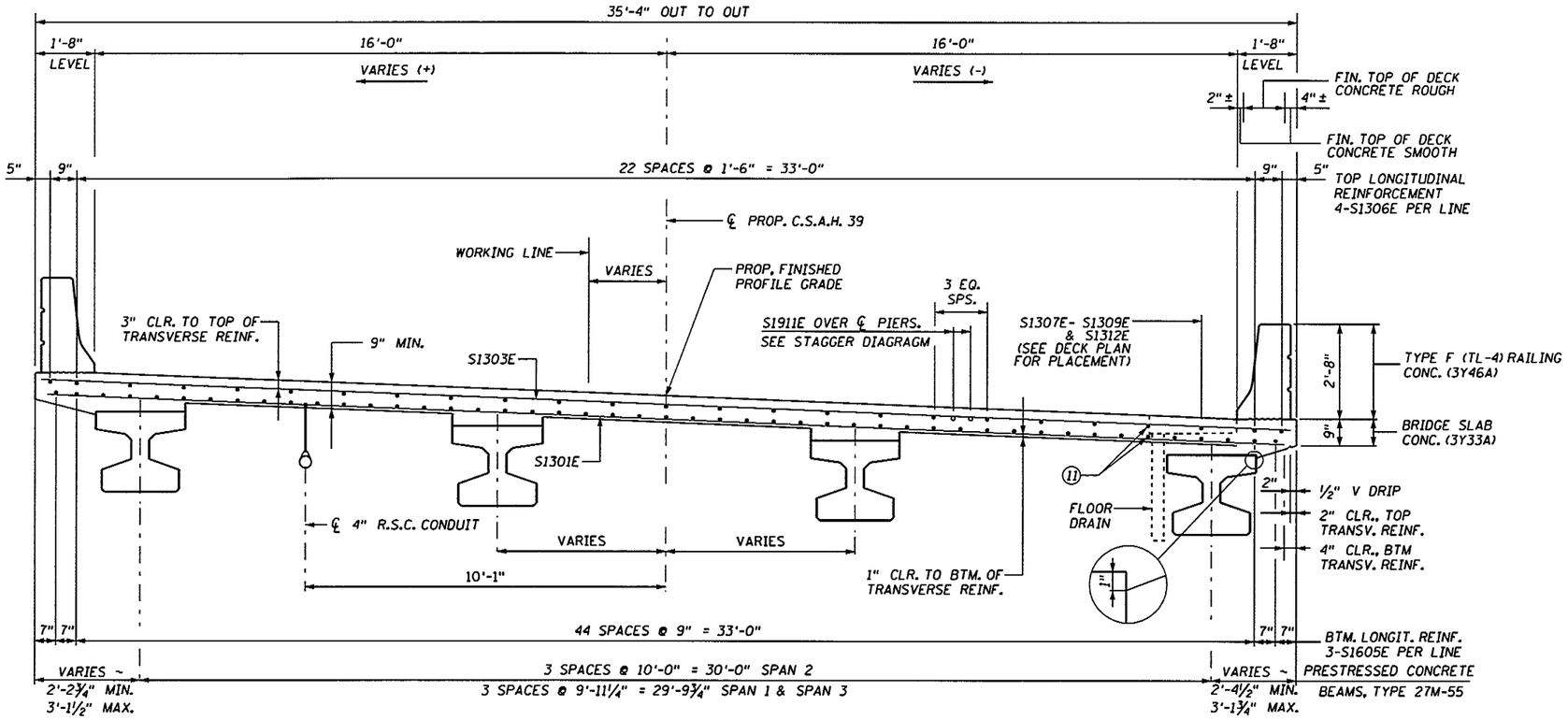

TRANSVERSE SECTION THRU DECK

SCALE: 0' 1' 2'

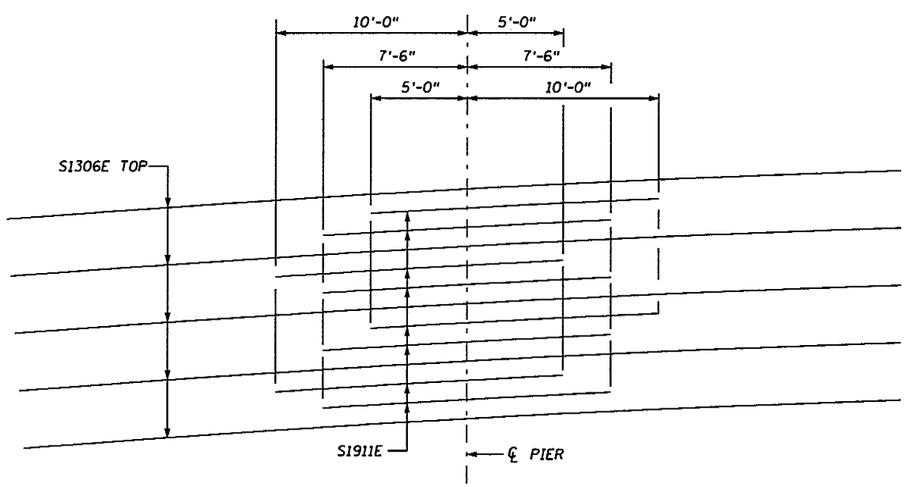

STAGGER DIAGRAM

	SUMMARY OF QUANTITIES - SUPERSTRUCTURE		
4			
5	BRIDGE SLAB CONCRETE (3Y33A)	5877	SQ. FT.
6	TYPE F (TL-4) BARRIER CONCRETE (3Y46A)	335	LIN. FT.
	REINFORCEMENT BARS (EPOXY COATED)	40470	POUND
7	PRESTRESSED CONCRETE BEAMS, TYPE 27M - 55	12	EACH
	PRESTRESSED CONCRETE BEAMS 27M	660	LIN. FT.
	FLOOR DRAIN, TYPE B706 MODIFIED	3	EACH
12	BRIDGE NAMEPLATE (SEE DETAIL B101)	1	
	CONDUIT SYSTEM (TELEPHONE)	1	LUMP SUM
8	ELASTOMERIC BEARING PAD, TYPE 1	8	EACH
2 9	3-PLY JOINT WATERPROOFING	80	LIN. FT.
10	BENCH MARK DISK	1	EACH
13	CURVED PLATE BEARING ASSEMBLY	16	EACH
	BEARING ASSEMBLY	16	EACH
	STRUCTURAL STEEL (3306)	530	POUND
14	PROTECTION PLATE (SEE DETAIL B553)		

1. SEE KEYNOTE A, SHEET 17.
2. PAYMENT SHALL BE CONSIDERED INCIDENTAL TO "BRIDGE SLAB CONCRETE (3Y33A".
3. SEE SPECIAL PROVISIONS.
4. INCLUDES BARRIER AND END DIAPHRAGM QUANTITIES.
5. APPROX. VOLUME = 213 CU. YDS. BASED ON AN AVERAGE STOOL HEIGHT OF 3⅞".
6. APPROX. VOLUME = 37 CU. YDS.
7. PAYMENT FOR BEAMS INCLUDED IN ITEM "PRESTRESSED CONCRETE BEAMS 27M" PER LINEAR FOOT.
8. PAYMENT FOR BEARINGS INCLUDED IN ITEM "ELASTOMERIC BEARING PAD TYPE 1" PER EACH. SEE DETAIL B310 (MOD.).
9. LENGTH BASED ON ASSUMED USE OF 1 PERMISSIBLE CONSTRUCTION JOINT AT EACH WING.
10. COUNTY WILL FURNISH DISK. BEND PRONGS OUTWARD TO ANCHOR DISK IN CONCRETE. BOTTOM OF DISK TOP TO BE PLACED FLUSH WITH CONCRETE. PAYMENT FOR PLACING SHALL BE CONSIDERED INCIDENTAL TO CONCRETE PAY ITEMS.
11. SHIFT S1301E OR S1302E A MINIMAL AMOUNT TO AVOID INTERFERENCE WITH FLOOR DRAINS.
12. INCIDENTAL TO "TYPE F (TL-4) RAILING CONCRETE (3Y46A)".
13. PAYMENT FOR BEARINGS INCLUDED IN ITEM "BEARING ASSEMBLY" PER EACH.
14. INCLUDED IN WEIGHT OF "STRUCTURAL STEEL (3306)".

	LIST OF PREFORMED JOINT FILLERS			
	TYPE	LIN. FT.	SIZE	LOCATION
1 2 3	POLYSTYRENE	16	½"x1"	ABUTMENT - BEARINGS
1 2 3	POLYSTYRENE	18	½"x2"	ABUTMENT - BEARINGS
1 2 3	POLYSTYRENE	18	½"x12"	ABUTMENT - BEARINGS
12 2 3	CORK	29	1"x13"	BARRIER DEFLECTION JOINTS

CERTIFIED BY Ronald Dokken
PROFESSIONAL ENGINEER/ RONALD DOKKEN
LIC. NO. 13931 7/15/ 2008

MINNESOTA DEPARTMENT
OF TRANSPORTATION

BRIDGE NO. 85565
SUPERSTRUCTURE DETAILS

APPROVED:
S.A.P. 85-639-21
SHEET 19 OF 41 SHEETS

DES.: RLD	DRN.: GRF	85565	
CHK.: CSK	CHK.: RLD		

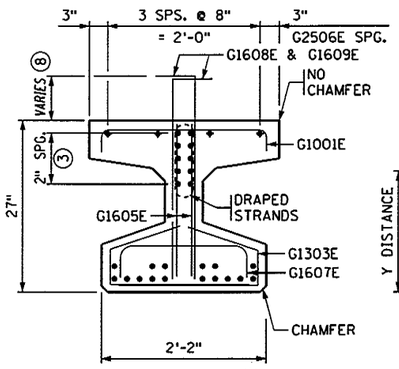

END VIEW ⑧

CUT STRANDS FLUSH WITH CONCRETE. PAINT ENDS WITH AN APPROVED GRAY EPOXY EXCEPT AS NOTED.

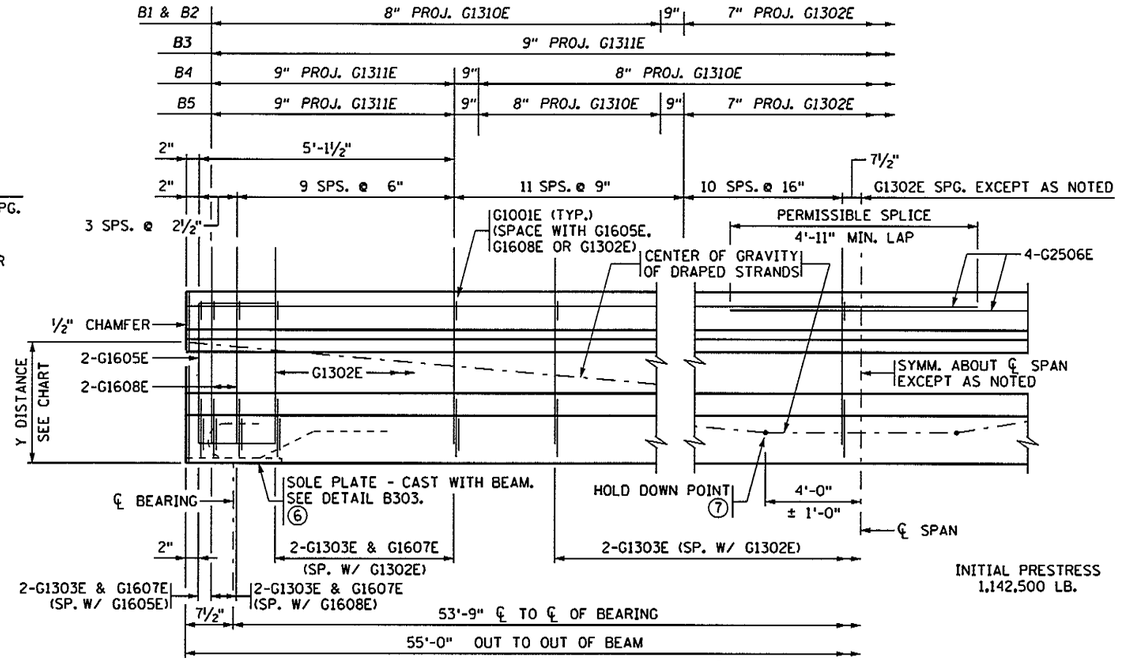

INITIAL PRESTRESS 1,142,500 LB.

BEAM ELEVATION ⑧

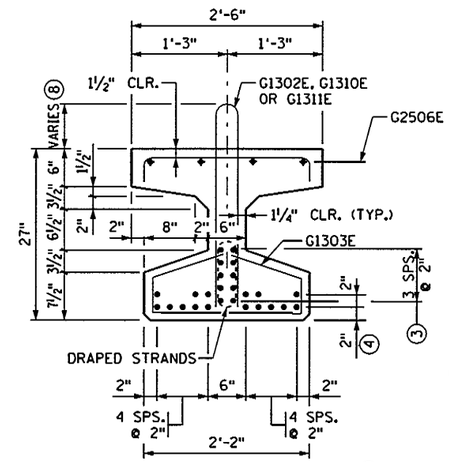

SECTION AT ℄ SPAN ⑧

Y DISTANCES (IN INCHES)			
	NO.	℄ SPAN	END
STRAIGHT STRANDS	16	2.75	
DRAPED STRANDS	10	7.00	20.00 ▫
TOTAL STRANDS	26	4.39	

Y = DISTANCE TO CENTER OF GRAVITY OF STRANDS FROM BOTTOM OF BEAM. ALL STRANDS SPACED 2" CENTER TO CENTER, HORIZONTALLY AND VERTICALLY, EXCEPT AS NOTED.

▫ A TOLERANCE OF ± 1" WILL BE PERMITTED IN THIS DIMENSION.

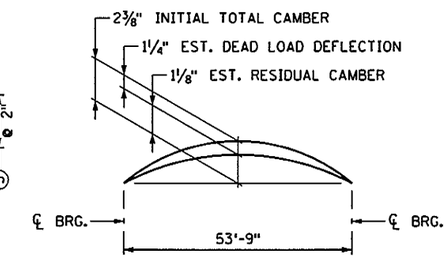

CAMBER DIAGRAM

INITIAL CAMBER IS GIVEN AFTER DIAPHRAGMS ARE IN PLACE.

DEAD LOAD DEFLECTION SHOWN IS FOR WEIGHT OF SLAB, WEARING COURSE, RAILING, SIDEWALK AND MEDIAN WHERE APPLICABLE.

ENGINEER WILL TAKE ELEVATIONS AT TOP OF BEAMS AFTER ERECTION AND WILL ALLOW FOR DEFLECTION SHOWN TO ENABLE CONTRACTOR TO BUILD FORMS TO CORRECT GRADE AND SPECIFIED SLAB THICKNESS.

CONTRACTOR SHALL PROVIDE TEMPORARY BRACING

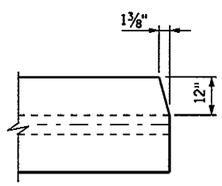

CLIP DETAILS B3-B5 ONLY ⑧

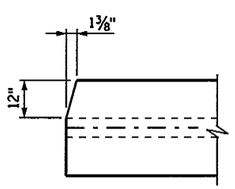

CLIP DETAILS B1-ONLY ⑧

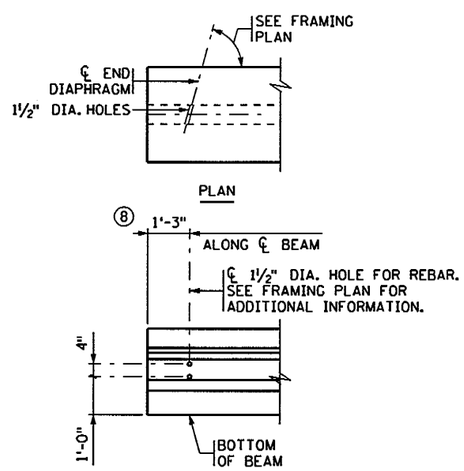

CONCRETE END DIAPHRAGM

CONTRACTION OR INTEGRAL ABUTMENT (SEE DETAIL B811 OR B815 FOR DIAPHRAGM DETAILS)

MINIMUM CONCRETE STRENGTH - P.S.I.	
① f'ci	② f'c
7000	7500

PRESTRESSING STRAND DIAMETER	
⑤	½" ☐
⑤	0.60" ☒

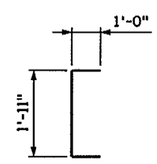

G1605E

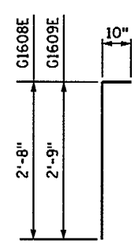

G1608E, G1609E ⑧

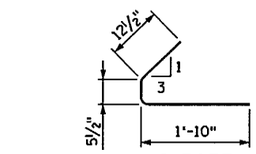

G1303E

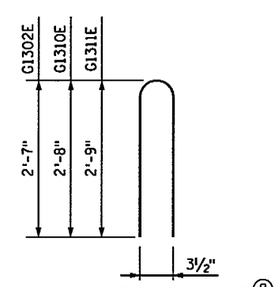

G1302E, G1310E, G1311E ⑧

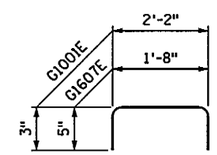

G1001E & G1607E

GENERAL NOTES

TOPS OF BEAMS SHALL BE ROUGH FLOATED AND BROOMED TRANSVERSELY FOR BOND.

PROVIDE HANDLING HOOKS OR DEVICES AS REQUIRED BY CONTRACTOR.

EACH BEAM SHALL BE MARKED, SHOWING BRIDGE NUMBER, CASTING DATE, AND INDIVIDUAL IDENTIFICATION LETTERS AND NUMBERS. MARKINGS SHALL BE MADE ON THE FACE OF THE BEAM, NEAR THE END, SO LOCATED THAT THEY WILL BE EXPOSED AFTER THE END DIAPHRAGMS HAVE BEEN CAST. FASCIA BEAMS SHALL BE MARKED ON THE INSIDE FACE. ALL MARKINGS SHALL BE STENCILLED AND BE CLEARLY LEGIBLE. FOR LOCATION OF BEAMS, SEE FRAMING PLAN.

ALL MATERIAL AND WORK SHOWN OR NOTED ON THIS SHEET SHALL BE INCLUDED IN UNIT PRICE BID FOR PRESTRESSED CONCRETE BEAMS. SEE Mn/DOT SPEC. 2405.

SEE FRAMING PLAN FOR BEAM END MARKED "X" AND DIAPHRAGM SPACING.

APPROXIMATE WEIGHT OF BEAM IS 16 TONS.

AS AN ALTERNATE TO THE DIAPHRAGM ANCHORAGES SHOWN, THE CONTRACTOR MAY SUBMIT DETAILS OF A CAST-IN-PLACE ANCHORAGE TO THE ENGINEER FOR APPROVAL. ANCHORAGE MUST PROVIDE AN ULTIMATE PULL OUT STRENGTH OF 15 KIPS PER ANCHORAGE.

① MINIMUM CONCRETE STRENGTH AT TIME OF PRESTRESS TRANSFER.

② MINIMUM CONCRETE STRENGTH WHEN BEAM CAN BE TRANSPORTED AND INSTALLED.

③ DRAPED STRANDS.

④ STRAIGHT STRANDS.

⑤ PRESTRESSING STRANDS SHALL BE 7-WIRE LOW RELAXATION STRAND, CONFORMING TO ASTM A416, GRADE 270.

⑥ ~~FOR INTEGRAL ABUTMENT, SOLE PLATE CAN BE ELIMINATED OR REPLACED WITH AN APPROVED PROTECTION PLATE.~~

⑦ CENTER OF GRAVITY OF HOLD DOWNS WHEN MULTIPLE HOLD DOWNS ARE USED.

⑧ DETAIL MODIFIED OR ADDED.

REVISED:

APPROVED: OCTOBER 26, 2005

STATE BRIDGE ENGINEER

CERTIFIED BY Ronald Dokken
PROFESSIONAL ENGINEER/ RONALD DOKKEN
LIC. NO. 13931 7/15/ 2008

TITLE: 27" PRESTRESSED CONCRETE BEAM (PRETENSIONED) 27M-55

BEAMS B1, B2 S.A.P. 85-639-21 FIG. 5-397.504 MOD.

DES: DJR	DR: GRF	APPROVED:	BRIDGE NO. 85565
CHK: CSK	CHK: RLD		
SHEET NO. 21 OF 41 SHEETS			

CONTRACTED PROFILE

SCALE: HOR. 0' 50' 100' VER. 0' 5' 10'

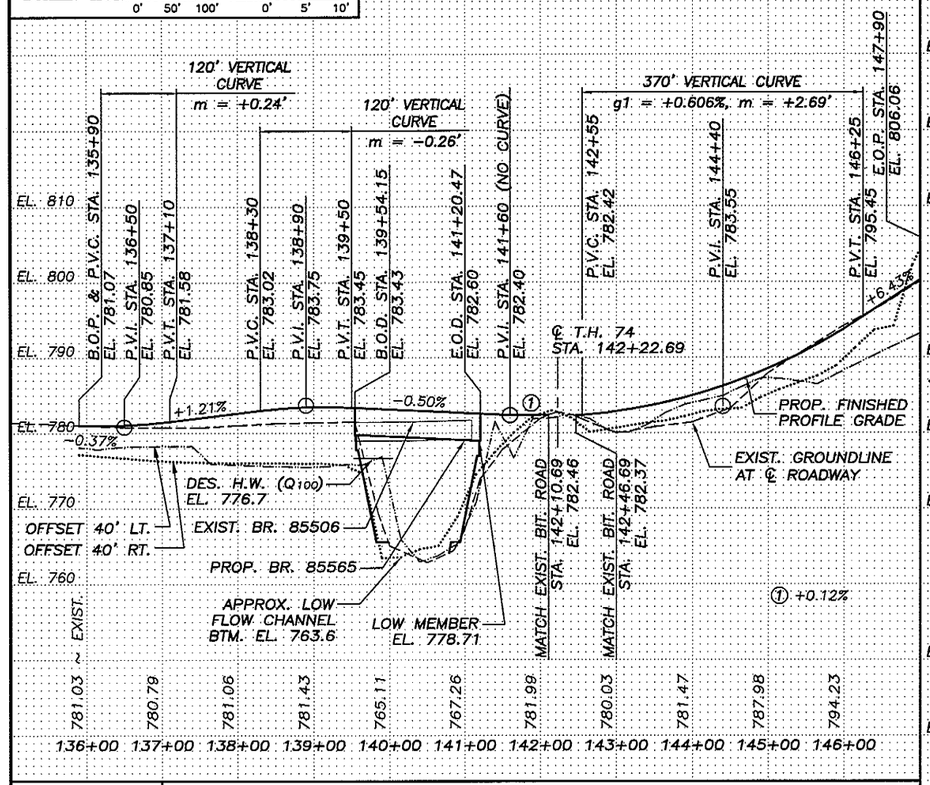

PLAT

SCALE: 0' 50' 100'

UTILITY INFORMATION

WARNING: DIAL GOPHER STATE ONE CALL AT 1-800-252-1166 48 HOURS IN ADVANCE OF CONSTRUCTION OPERATIONS TO OBTAIN COMPLETE UTILITY PROPERTY OWNERSHIP AND LOCATION INFORMATION.

UTILITY INFO AVAILABLE FOR PLAN PREPARATION:
QWEST (BURIED TELEPHONE) 800-283-4237
PEOPLES CO-OP POWER (OVERHEAD POWER) 406-541-9571
NOTE: FIELD VERIFY ALL UTILITIES.

EXIST. BR. 85506
PRECAST CONC. CHANNEL SPAN
LENGTH: 155.5'
ROAD WIDTH: 29.4'
YEAR BUILT: 1966

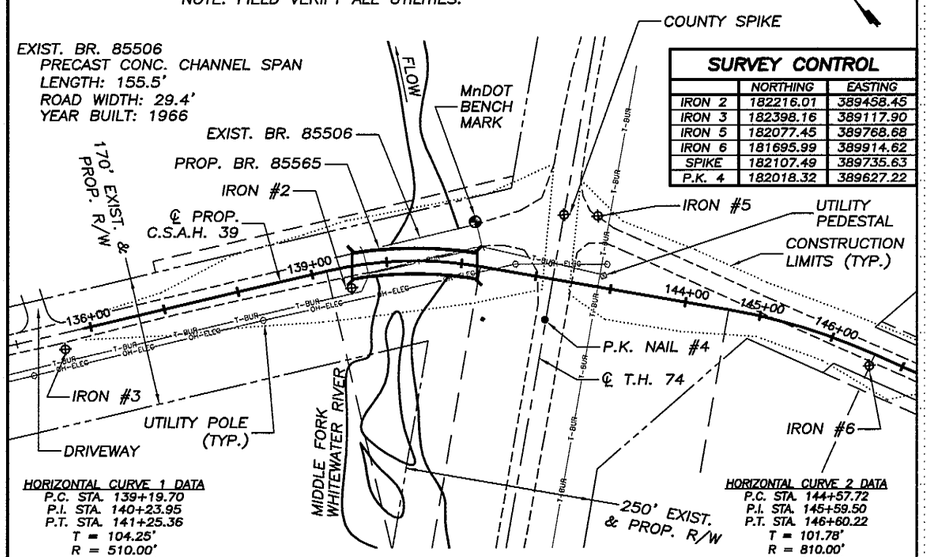

SURVEY CONTROL	NORTHING	EASTING
IRON 2	182216.01	389458.45
IRON 3	182398.16	389117.90
IRON 5	182077.45	389768.68
IRON 6	181695.99	389914.62
SPIKE	182107.49	389735.63
P.K. 4	182018.32	389627.22

HORIZONTAL CURVE 1 DATA
P.C. STA. 139+19.70
P.I. STA. 140+23.95
P.T. STA. 141+25.36
T = 104.25'
R = 510.00'
L = 205.66'
Δ = 23°06'17" RT.

HORIZONTAL CURVE 2 DATA
P.C. STA. 144+57.72
P.I. STA. 145+59.50
P.T. STA. 146+60.22
T = 101.78'
R = 810.00'
L = 202.50'
Δ = 14°19'25" RT.

TYPICAL SECTIONS & PERTINENT DATA

SCALES AS SHOWN

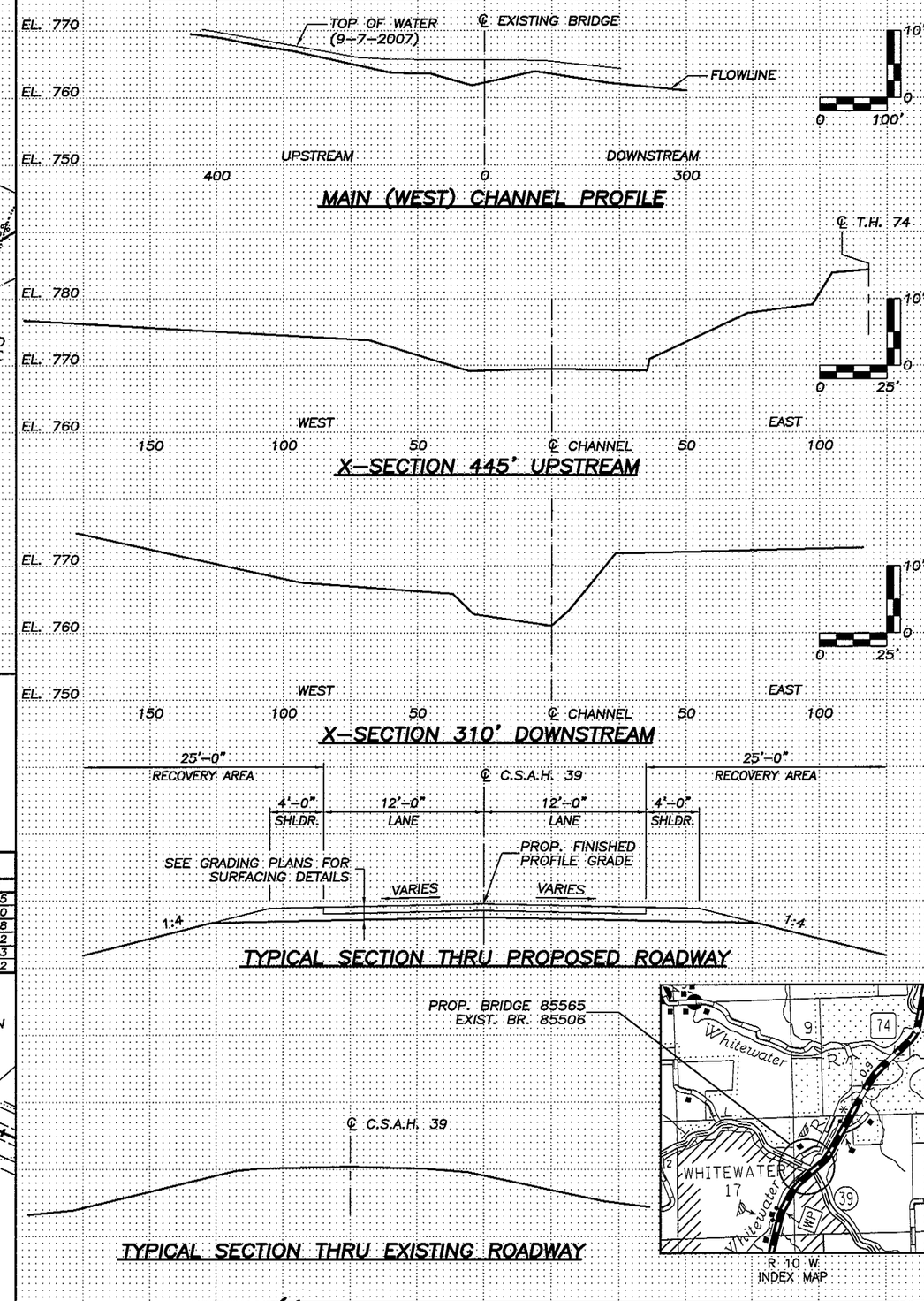

Fed. Proj. No.

LOCATION ENGINEER'S OBSERVATION AT BRIDGE SITE

DATE .....

1. Special Features: Waterfalls, dams, floods, ice, debris, sliding banks, rec. boats.
2. Other bridges or culverts over the same stream (particularly structures which carry high water without overflow of roadway) :Given location, type, length, height above high water, cross-sectional area, etc.
3. Apparent highwater elevation 781.8 Obtained from LOCAL RESIDENT
4. Other data: Approx. velocity of water at time of survey .....

HYDRAULIC ENGINEER'S RECOMMENDATION

DATE 10-4-2007

Stream or ditch designation MIDDLE FORK WHITEWATER RIVER
Drainage area 48.5 SQ. MI.
Max. flood on record UNKN Design flood (100 yr. freq.) 8920 C.F.S.
Max. observed highwater elev. 781.8 Design highwater elev. 776.7
Design mean velocity through structure 5.7 F.P.S.
Low superstructure at or above elevation 778.2
Flowline elevation 763.6 Skew angle 0°
Waterway area req'd below elev. 776.7 = 1555 Square Feet @ right angles to channel

In the interest of flood plain zoning the regional flood (100 yr. freq.) is 8920 C.F.S. at stage 776.7 and mean velocity of 5.7 F.P.S. with 0.2 Ft. swellhead. The above recommendation will provide a structure of adequate waterway to pass the regional flood within criteria established by the Dept. of Natural Resources.

SCOUR CODE: L
ESTIMATED PIER SCOUR ELEV.: 756.9

ENGINEER'S RECOMMENDATION

DATE 11-28-2007

55'-55'-55' PRESTRESSED CONCRETE BEAM SPAN
0° SKEW, 32 FT. ROADWAY WIDTH

Bridge survey sheets made from: SURVEY NOTES FROM ERICKSON ENGINEERING (DATED 9-7-2007)

Benchmark elevation 782.04 (N.A.V.D. 88)
Location: MnDOT MONUMENT 8508K IN N.E. ABUTMENT CORNER OF EXIST. BR. 85506

STATE OF MINNESOTA
DEPARTMENT OF TRANSPORTATION

BRIDGE SURVEY

AT MILE POINT ..... ON C.S.A.H. 39
PROPOSED BRIDGE LOCATED 0.1 MILE WEST OF JCT. T.H. 74 OVER MIDDLE FORK WHITEWATER RIVER
SEC. 16 TWP. 107 N R. 10 W
TOWNSHIP ELBA COUNTY WINONA
EXIST. BRIDGE NO. 85506
PROP. BRIDGE NO. 85565

CERTIFIED BY Ronald D. Dahlen LIC. NO. 13931 7/15/2008

State Aid Proj. No. 85-639-21

Sheet No. 28 of 41 Sheets

Fed. Proj. No.

LIMITS OF RANDOM RIPRAP AS SHOWN ARE APPROXIMATE ONLY. EXACT LIMITS SHALL BE DETERMINED BY THE ENGINEER IN THE FIELD.

APPROACH GRADING UNDER SAME CONTRACT.

① 9" GRANULAR FILTER IS INCLUDED IN PRICE BID FOR "RANDOM RIPRAP, CL. III". APPROX. QUANTITY = 155 CU. YDS.

② BRIDGE CONTRACTOR SHALL EXCAVATE AND FILL TO THESE LINES AS SHOWN, THEN TAPER AS NOTED TO NATURAL CHANNEL SLOPES. INCLUDED IN PRICE BID FOR SLOPE PREPARATION.

③ 1:2 (TYP.)

④ 1:2.2 UPSTREAM
1:2.0 DOWNSTREAM

⑤ LIMITS OF STRUCTURE EXCAVATION AND SELECT GRANULAR BORROW. INCLUDED IN PRICE BID FOR STRUCTURE EXCAVATION. PLACEMENT BETWEEN WINGWALL ENDS WITH 1:1.5 BACKSLOPE. DIMENSIONS AND SLOPES ARE MEASURED PERPENDICULAR TO THE BACK OF THE ABUTMENT. SEE SHEETS 7 & 10 FOR REQUIREMENTS.

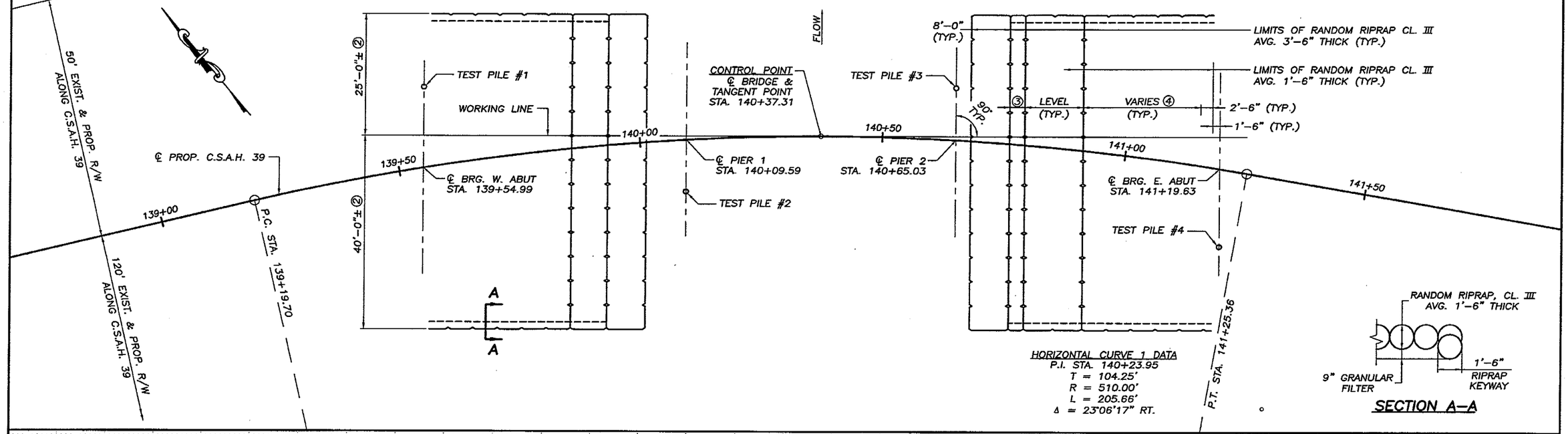

CERTIFIED BY Ronald Dokken
PROFESSIONAL ENGINEER RONALD DOKKEN
LIC. NO. 13931 7/15/ 2008

BRIDGE SURVEY PLAN & PROFILE	DES.: RLD	DRN.: NBB	APPROVED:	Bridge No.
	CHK.: CSK	CHK.: RLD		
State Aid Proj. No. 85-639-21	Sheet No. 29 of 41 Sheets			85565

Fed. Proj. No.

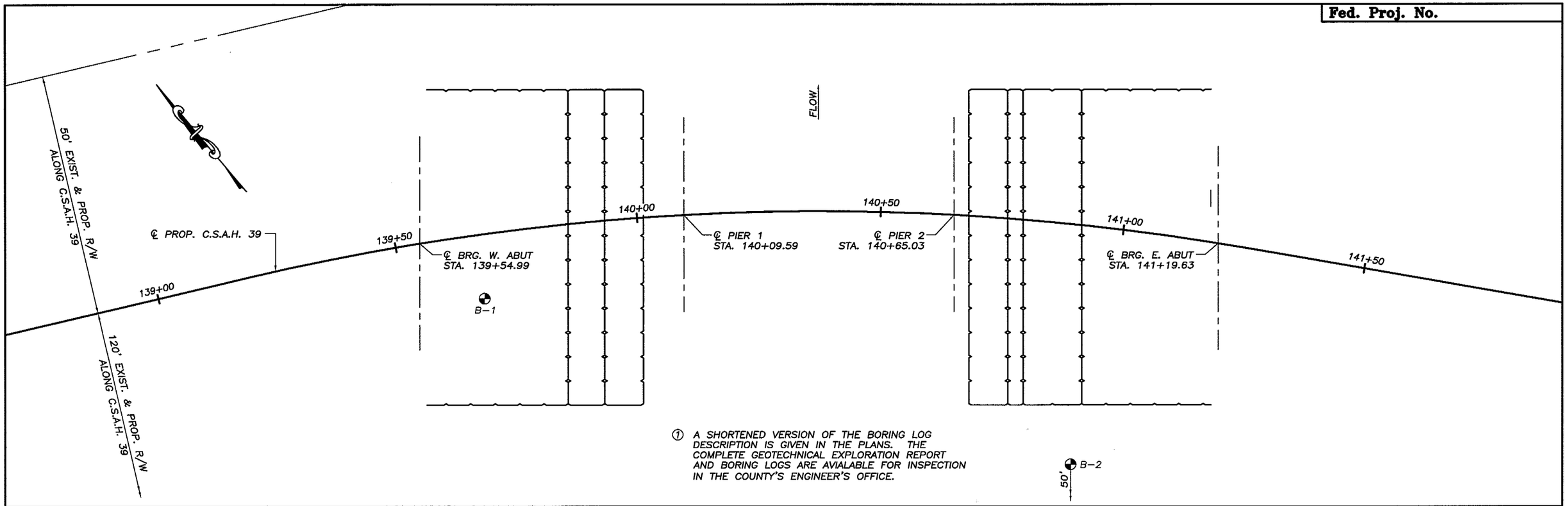

① A SHORTENED VERSION OF THE BORING LOG DESCRIPTION IS GIVEN IN THE PLANS. THE COMPLETE GEOTECHNICAL EXPLORATION REPORT AND BORING LOGS ARE AVIALABLE FOR INSPECTION IN THE COUNTY'S ENGINEER'S OFFICE.

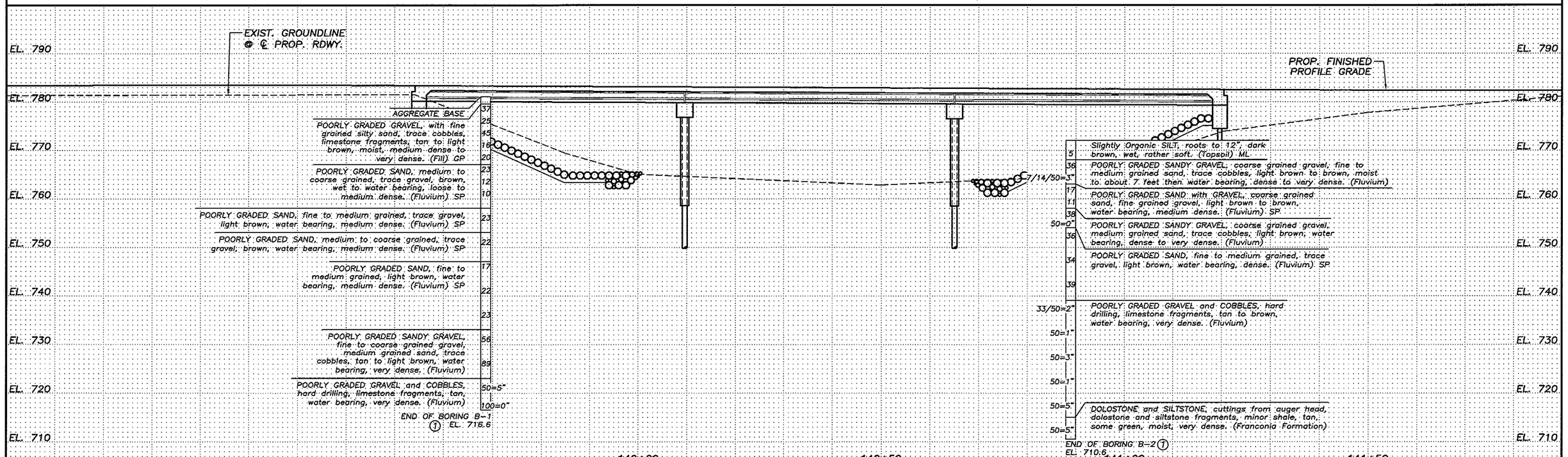

BORINGS B-1 & B-2 SHOWN TAKEN WITH STD 140 LB HAMMER 30 INCH DROP 2 INCH O.D. SAMPLER	CERTIFIED BY Ronald Dokken PROFESSIONAL ENGINEER/RONALD DOKKEN LIC. NO. 13931 7/15/ 2008	BRIDGE SURVEY PLAN & PROFILE	DES.: RLD DRN.: NBB CHK.: CSK CHK.: RLD	APPROVED:	Bridge No.
		State Aid Proj. No. 85-639-21	Sheet No. 30 of 41 Sheets		85565

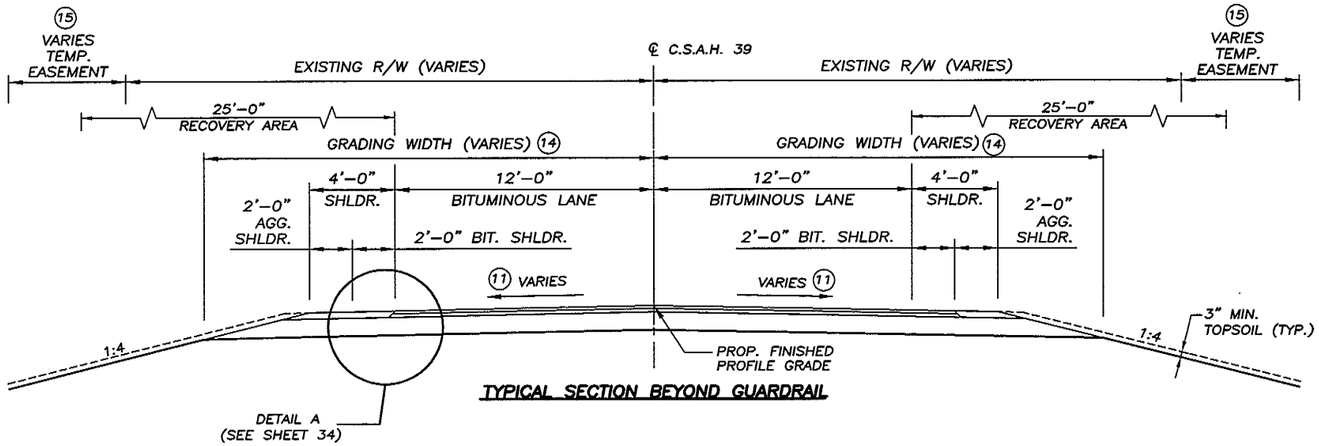

TYPICAL SECTION BEYOND GUARDRAIL

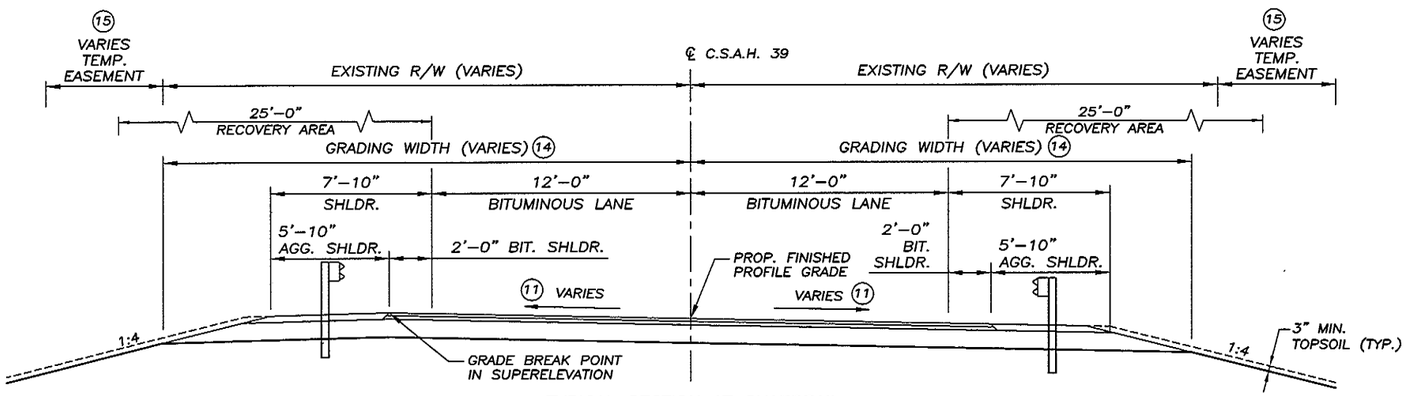

TYPICAL SECTION AT GUARDRAIL

(1) SCHEDULE OF ESTIMATED GRADING QUANTITIES

KEYNOTE	ITEM NO.	ITEM	QUANTITY	UNIT
1,2	2101.511	CLEARING & GRUBBING	1	LUMP SUM
1,4	2104.513	SAWING BITUMINOUS PAVEMENT (FULL DEPTH)	448	LIN. FT.
1,5	2105.501	COMMON EXCAVATION	1747	CU. YD.
1,16	2105.523	COMMON BORROW (LV)	3052	CU. YD.
12,17	2105.601	TWO LANE BYPASS	1	LUMP SUM
1,6,18	2211.503	AGGREGATE BASE (CV) CLASS 5	1235	CU. YD.
1	2221.503	AGGREGATE SHOULDERING (CV) CLASS 2	74	CU. YD.
1,3	2331.604	BITUMINOUS PAVEMENT RECLAMATION	3064	SQ. YD.
1,8	2357.502	BITUMINOUS MATERIAL FOR TACK COAT	174	GAL.
1,7,13	2360.501	TYPE SP 12.5 WEARING COURSE MIXTURE (2,C)	733	TON
1	2501.511	18" CS PIPE CULVERT	36	LIN. FT.
1	2501.569	18" GS SAFETY APRON	2	EACH
1,9	2573.502	SILT FENCE, TYPE MACHINE SLICED	2065	LIN. FT.
1,10	2575.555	TURF ESTABLISHMENT	1	LUMP SUM

PROJECT BALANCE (CU. YD.)

WEST END OF BRIDGE 85565

EXCAVATION (EV) 283 — COMMON 84, TOPSOIL 199

EMBANKMENT (CV) 1718 — COMMON 1519, TOPSOIL 199

EAST END OF BRIDGE 85565

EXCAVATION (EV) 2045 — COMMON 1663, TOPSOIL 382

EMBANKMENT (CV) 2239 — COMMON 1857, TOPSOIL 382

EMBANKMENT BORROW (LV) 3052

140% SHRINKAGE FACTOR USED FOR EMBANKMENT CONSTRUCTION.

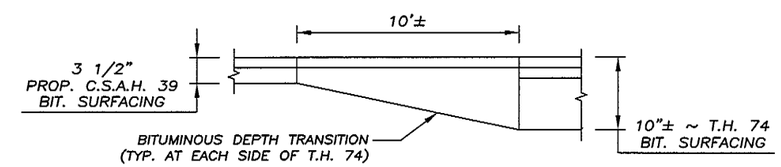

DEPTH TRANSITION DETAIL

WARNING: DIAL GOPHER STATE ONE CALL AT 1-800-252-1166 48 HOURS IN ADVANCE OF CONSTRUCTION OPERATIONS TO OBTAIN COMPLETE UTILITY PROPERTY OWNERSHIP AND LOCATION INFORMATION.

(1) GRADING QUANTITIES SHOWN ARE NON-PARTICIPATING.

(2) CONSISTS OF APPROX. 2.0 ACRES.

(3) INCLUDES ALL EXISTING BITUMINOUS PAVEMENT BETWEEN B.O.P. STA. 135+90 & E.O.P. STA. 147+90 (LESS EXISTING BRIDGE AND T.H. 74 SURFACING). INCLUDES OBILTERATION OF EXISTING ROAD AS SHOWN IN PLANS AND DIRECTED BY THE ENGINEER IN THE FIELD.

(4) SAWCUT ACROSS EXISTING C.S.A.H. 39 AT B.O.P. STA. 135+90 & E.O.P. STA. 147+90 AS SHOWN IN PLANS AND AS DIRECTED BY THE ENGINEER IN THE FIELD. SAWCUT ACROSS EXISTING & PROPOSED C.S.A.H. 39 AT SHOULDERS OF T.H. 74 AS DIRECTED BY THE ENGINEER IN THE FIELD.

(5) COMMON EXCAVATION INCLUDES EXCAVATION AND EMBANKMENT AS REQUIRED. QUANTITY INCLUDES APPROX. 581 CU. YD. OF SALVAGED TOPSOIL (ASSUMED 3" DEEP).

(6) INCLUDES 13 CU. YDS. FOR PLACEMENT AT RECONSTRUCTED DRIVEWAY AT STA. 143+66 RT.

(7) QUANTITY BASED ON MIXTURE WEIGHT OF 110 LBS. PER SQ. YD. PER 1 INCH THICKNESS.

(8) PLACEMENT SHALL BE AT THE RATE OF 0.05 GALLON PER SQ. YD.

(9) MAINTAINED. PLACE SILT FENCE AT TOE ON INSLOPE OR AS DIRECTED BY THE ENGINEER IN THE FIELD. IF THE SILT FENCE IS DAMAGED OR REMOVED BY THE CONTRACTOR DURING CONSTRUCTION, THE CONTRACTOR SHALL REPLACE WITH NO DIRECT COMPENSATION THEREOF. SEE SHEET 35 FOR LOCATION & SHEET 39 FOR DETAILS.

(10) TURF ESTABLISHMENT SHALL INCLUDE ALL AREAS DISTURBED BY CONSTRUCTION AND SHALL CONSIST OF SEED MIXTURE NO. 250, 70 LB./ACRE, COMMERCIAL FERTILIZER TYPE 2 APPLIED AT 300 LB./ACRE, MULCH MATERIAL TYPE 1 APPLIED AT 2 TONS/ACRE, AND DISK ANCHORING FOR APPROX. 1.8 ACRES.

(11) ROADWAY AND SHOULDER CROSS SLOPE VARIES WITH SUPERELEVATION. SEE SUPERELEVATION DIAGRAMS ON SHEET 34 AND CROSS SECTION SHEETS 36-37 FOR DETAILS.

(12) TWO LANE BYPASS SHALL INCLUDE THE CONSTRUCTION AND REMOVAL OF A TEMPORARY ROAD CONNECTION. TWO LANE BYPASS SHALL INCLUDE THE FOLLOWING APPROXIMATE QUANTITIES:
- 185 CU. YD. (EV) COMMON EXCAVATION (INCLUDES 40 CU. YD. TOPSOIL)
- 2248 CU. YD. (CV) EMBANKMENT (INCLUDES COMMON BORROW MATERIAL)
- 3002 CU. YD. (LV) COMMON BORROW
- 200 CU. YD. (CV) CLASS 5 AGGREGATE SURFACING
- 170 SQ. YD. TYPE V GEOTEXTILE FABRIC
- 240 LIN. FT. 72" DIA. C.S. PIPE CULVERT
- 60 CU. YD. RANOM RIPRAP, CLASS III
- 95 CU. YD. GRANULAR BEDDING

(13) INCLUDES:
- 116 TONS FOR APPROACHES AND TURN LANES ON T.H. 74
- 599 TONS FOR PROPOSED ROADWAY
- 14 TONS FOR BITUMINOUS DEPTH TRANSITIONS AT T.H. 74 (SEE DETAIL ON THIS SHEET)
- 4 TONS FOR RECONSTRUCTION OF DRIVEWAY AT STA. 143+66 RT.

(14) GRADING WIDTH VARIES WITH SUPERELEVATION. SEE CROSS SECTIONS ON SHEETS 36 AND 37 FOR DETAILS.

(15) SEE SHEETS 36 AND 37 FOR TEMPORARY EASEMENTS.

(16) INCLUDE 52 CU. YD. (LV) FOR RECONSTRUCTION OF OF DRIVEWAY AT STA. 143+66 RT.

(17) GRADING QUANTITIES SHOWN ARE PARTICIPATING.

(18) INCLUDES 29 CU. YD. OF CRUSHED BITUMINOUS SURFACING MATERIAL FROM EXISTING ROADWAY.

I HEREBY CERTIFY THAT THIS PLAN (SHEETS 33-41) WAS PREPARED BY ME OR UNDER MY DIRECT SUPERVISION AND THAT I AM A DULY LICENSED PROFESSIONAL ENGINEER UNDER THE LAWS OF THE STATE OF MINNESOTA.

Thomas J. Wilson — THOMAS WILSON

LIC. NO. 21690 — 7-15- 2008

PLANS PREPARED BY:

ERICKSON ENGINEERING
9330 JAMES AVE
BLOOMINGTON, MN 55431

C.S.A.H. 39 — WINONA COUNTY

MINNESOTA DEPARTMENT OF TRANSPORTATION

BRIDGE NO. 85565 APPROACH GRADING

ESTIMATED QUANTITIES & CONSTRUCTION NOTES

S.A.P. 85-639-21

SHEET 33 OF 41 SHEETS

DES.: TJW	DRN.: SUK	85565
CHK.: DSP	CHK.: DSP	

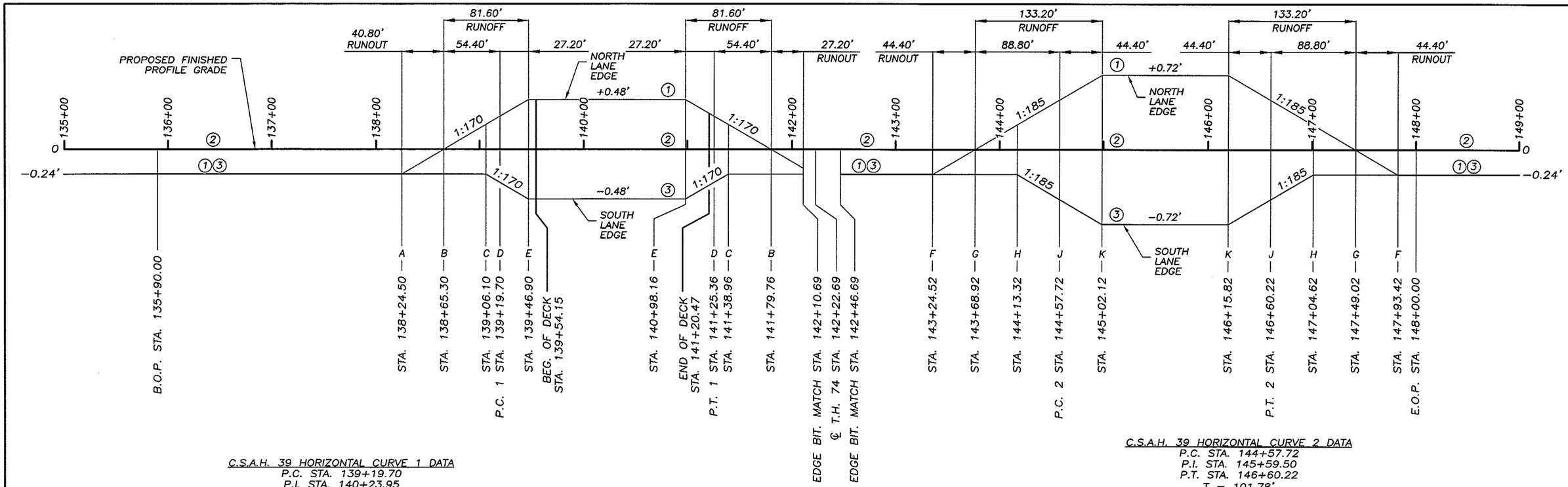

C.S.A.H. 39 HORIZONTAL CURVE 1 DATA
P.C. STA. 139+19.70
P.I. STA. 140+23.95
P.T. STA. 141+25.36
T = 104.25'
R = 510.00'
L = 205.66'
Δ = 23°06'17" RT.
Max e = 4.0%

C.S.A.H. 39 HORIZONTAL CURVE 2 DATA
P.C. STA. 144+57.72
P.I. STA. 145+59.50
P.T. STA. 146+60.22
T = 101.78'
R = 810.00'
L = 202.50'
Δ = 14°19'25" RT.
Max e = 6.0%

SUPERELEVATION DIAGRAM
(NOT TO SCALE)

LIST OF STANDARD PLATES

PLATE NO.	DESCRIPTION
9000 D	APPROACHES & ENTRANCES
9102 D	TURF ESTABLISHMENT AREAS

THE ABOVE STANDARD PLATES, APPROVED BY THE F.H.W.A., SHALL APPLY ON THIS PROJECT.

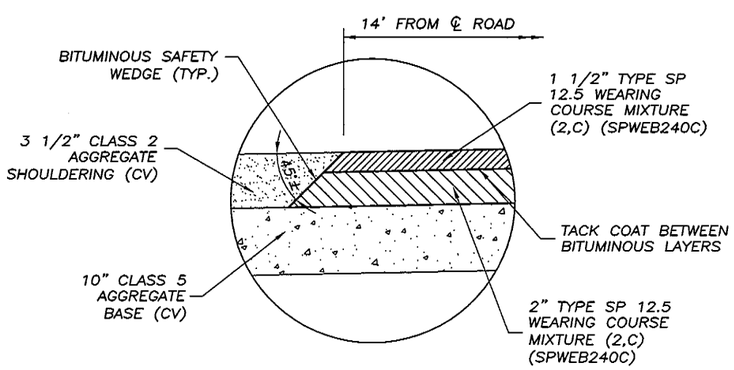

DETAIL A
(SEE SHEET 33 FOR FULL CROSS-SECTION)

CONSTRUCTION NOTES

NATURAL TOPSOIL SHALL BE SALVAGED FROM ALL AREAS DISTURBED BY CONSTRUCTION AND PLACED ON ALL CONSTRUCTED SLOPES AND DITCH BOTTOMS WITH A DEPTH OF NOT LESS THAN 3". THE CONTRACTOR WILL BE REQUIRED TO TRANSPORT TOPSOIL TO AREAS WITHIN THE RIGHT-OF-WAY FOR STORAGE DURING GRADING. THE SALVAGING, TRANSPORTING AND PLACING OF TOPSOIL WILL BE INCIDENTAL TO THE "COMMON EXCAVATION" PAY ITEM.

ALL CONSTRUCTION SHOWN SHALL BE DONE WITHIN EXISTING R/W LIMITS & THE TEMPORARY EASEMENTS.

SELECTED GRADING MATERIALS SHALL BE USED FOR ALL EMBANKMENT CONSTRUCTION AND SHALL CONSIST OF ALL SOILS ENCOUNTERED EXCEPT TOPSOILS, HIGHLY ORGANIC SOILS, DEBRIS, AND OTHER UNSUITABLE MATERIALS.

IF SELECTED GRADING MATERIAL IS NOT AVAILABLE OR CANNOT BE OBTAINED FROM THE ONSITE EXCAVATIONS, BORROW MATERIAL SHALL BE FURNISHED FROM SOURCES SELECTED BY THE CONTRACTOR AND SHALL BE APPROVED BY THE ENGINEER PRIOR TO BEING DELIVERED TO THE PROJECT.

THE DENSITY OF THE SUBGRADE AND THE AGGREGATE BASE & SHOULDERING SHALL BE THAT ATTAINED BY THE METHOD OF QUALITY COMPACTION IN ACCORDANCE WITH THE REQUIREMENTS OF 2105.3F2.

ALL DIMENSIONS & SLOPES SHOWN IN THE TYPICAL SECTION ARE APPROXIMATE.

ANY DAMAGE TO THE C.S.A.H. 39 PAVEMENT OUTSIDE OF THE PROJECT LIMITS RESULTING FROM THE CONTRACTOR'S OPERATIONS SHALL BE REPAIRED TO ITS CONDITION PRIOR TO CONSTRUCTION, TO THE SATISFACTION OF THE ENGINEER IN THE FIELD. ALL ASSOCIATED COSTS SHALL BE CONSIDERED INCIDENTAL TO THE APPROACH GRADING BID ITEMS.

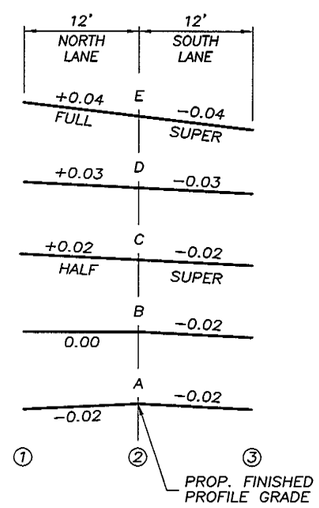

CURVE 1 SUPERELEVATION DIAGRAM

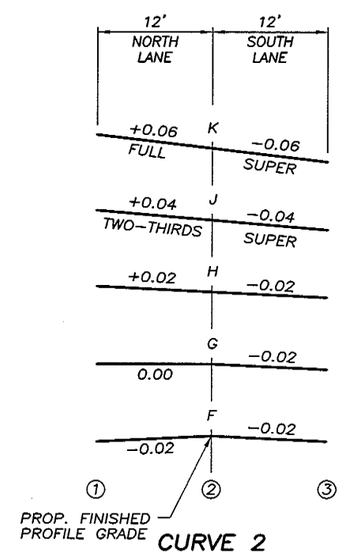

CURVE 2 SUPERELEVATION DIAGRAM

CERTIFIED BY Thomas J. Wilson
PROFESSIONAL ENGINEER/THOMAS J. WILSON
LIC. NO. 21690 7-15-2008

PLANS PREPARED BY:
ERICKSON ENGINEERING
9330 JAMES AVE
BLOOMINGTON, MN 55431

MINNESOTA DEPARTMENT OF TRANSPORTATION

BRIDGE NO. 85565

SUPERELEVATION DIAGRAMS

S.A.P. 85-639-21
SHEET 34 OF 41 SHEETS

DES.: TJW	DRN.: SUK	85565
CHK.: DSP	CHK.: DSP	

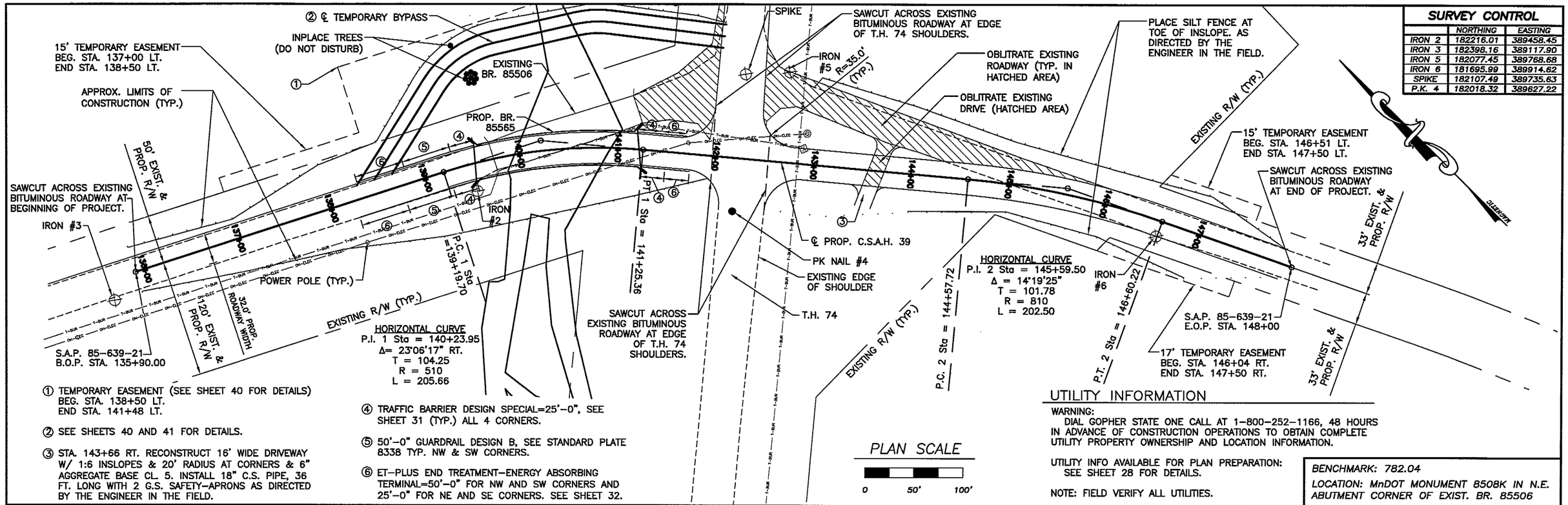

SURVEY CONTROL

	NORTHING	EASTING
IRON 2	182216.01	389458.45
IRON 3	182398.16	389117.90
IRON 5	182077.45	389768.68
IRON 6	181695.99	389914.62
SPIKE	182107.49	389735.63
P.K. 4	182018.32	389627.22

① TEMPORARY EASEMENT (SEE SHEET 40 FOR DETAILS) BEG. STA. 138+50 LT. END STA. 141+48 LT.

② SEE SHEETS 40 AND 41 FOR DETAILS.

③ STA. 143+66 RT. RECONSTRUCT 16' WIDE DRIVEWAY W/ 1:6 INSLOPES & 20' RADIUS AT CORNERS & 6" AGGREGATE BASE CL. 5. INSTALL 18" C.S. PIPE, 36 FT. LONG WITH 2 G.S. SAFETY-APRONS AS DIRECTED BY THE ENGINEER IN THE FIELD.

④ TRAFFIC BARRIER DESIGN SPECIAL=25'-0", SEE SHEET 31 (TYP.) ALL 4 CORNERS.

⑤ 50'-0" GUARDRAIL DESIGN B, SEE STANDARD PLATE 8338 TYP. NW & SW CORNERS.

⑥ ET-PLUS END TREATMENT-ENERGY ABSORBING TERMINAL=50'-0" FOR NW AND SW CORNERS AND 25'-0" FOR NE AND SE CORNERS. SEE SHEET 32.

UTILITY INFORMATION

WARNING:
DIAL GOPHER STATE ONE CALL AT 1-800-252-1166, 48 HOURS IN ADVANCE OF CONSTRUCTION OPERATIONS TO OBTAIN COMPLETE UTILITY PROPERTY OWNERSHIP AND LOCATION INFORMATION.

UTILITY INFO AVAILABLE FOR PLAN PREPARATION: SEE SHEET 28 FOR DETAILS.

NOTE: FIELD VERIFY ALL UTILITIES.

BENCHMARK: 782.04
LOCATION: MnDOT MONUMENT 8508K IN N.E. ABUTMENT CORNER OF EXIST. BR. 85506

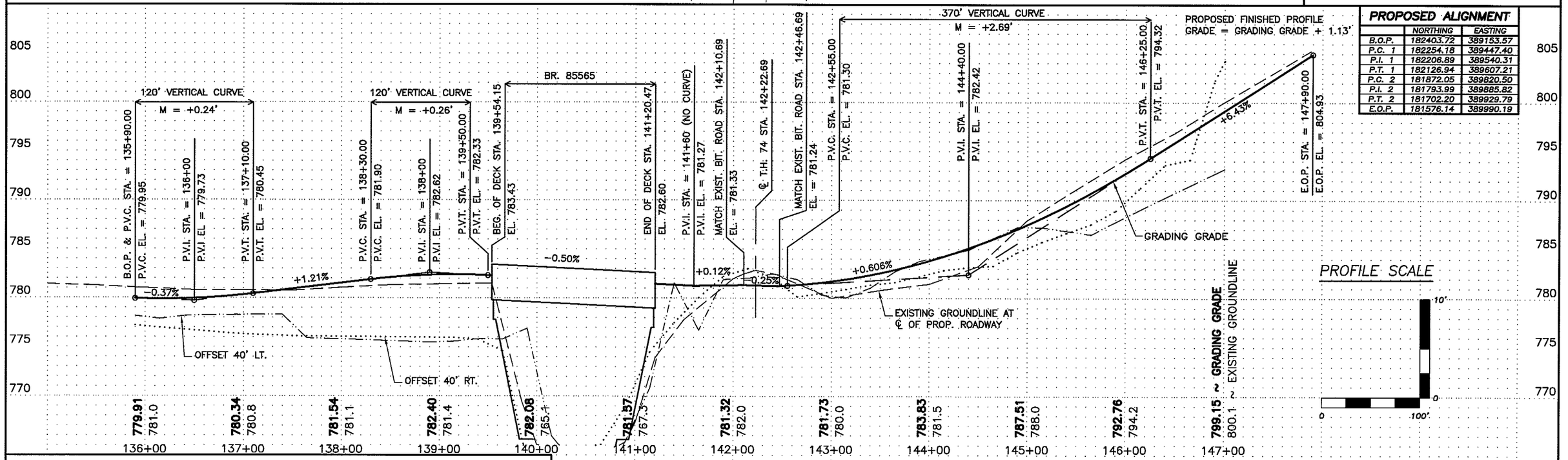

PROPOSED ALIGNMENT

	NORTHING	EASTING
B.O.P.	182403.72	389153.57
P.C. 1	182254.18	389447.40
P.I. 1	182206.89	389540.31
P.T. 1	182126.94	389607.21
P.C. 2	181872.05	389820.50
P.I. 2	181793.99	389885.82
P.T. 2	181702.20	389929.79
E.O.P.	181576.14	389990.19

CERTIFIED BY: Thomas J. Wilson LIC. NO. 21690 7-15- 2008
PROFESSIONAL ENGINEER/THOMAS J. WILSON

APPROVED:

DES.: TJW	DRN.: SUK	S.A.P. 85-639-21	SHEET 35 OF 41 SHEETS
CHK.: DSP	CHK.: DSP		

PLAN & PROFILE

85565

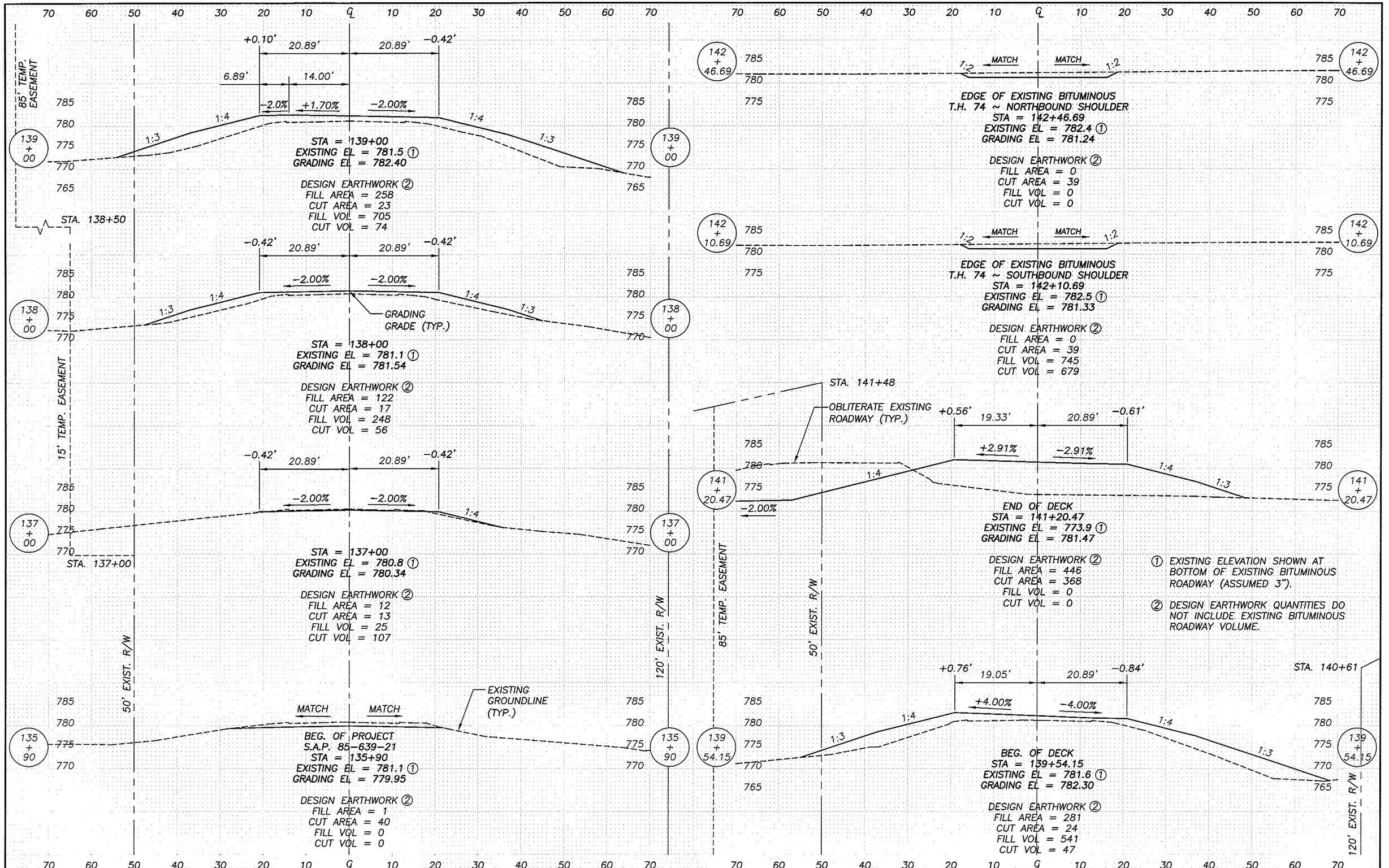

APPROVED:	DES.: TJW	DRN.: SUK	ROADWAY CROSS SECTIONS	S.A.P. 85-639-21	SHEET 36 OF 41 SHEETS	85565
	CHK.: DSP	CHK.: DSP				

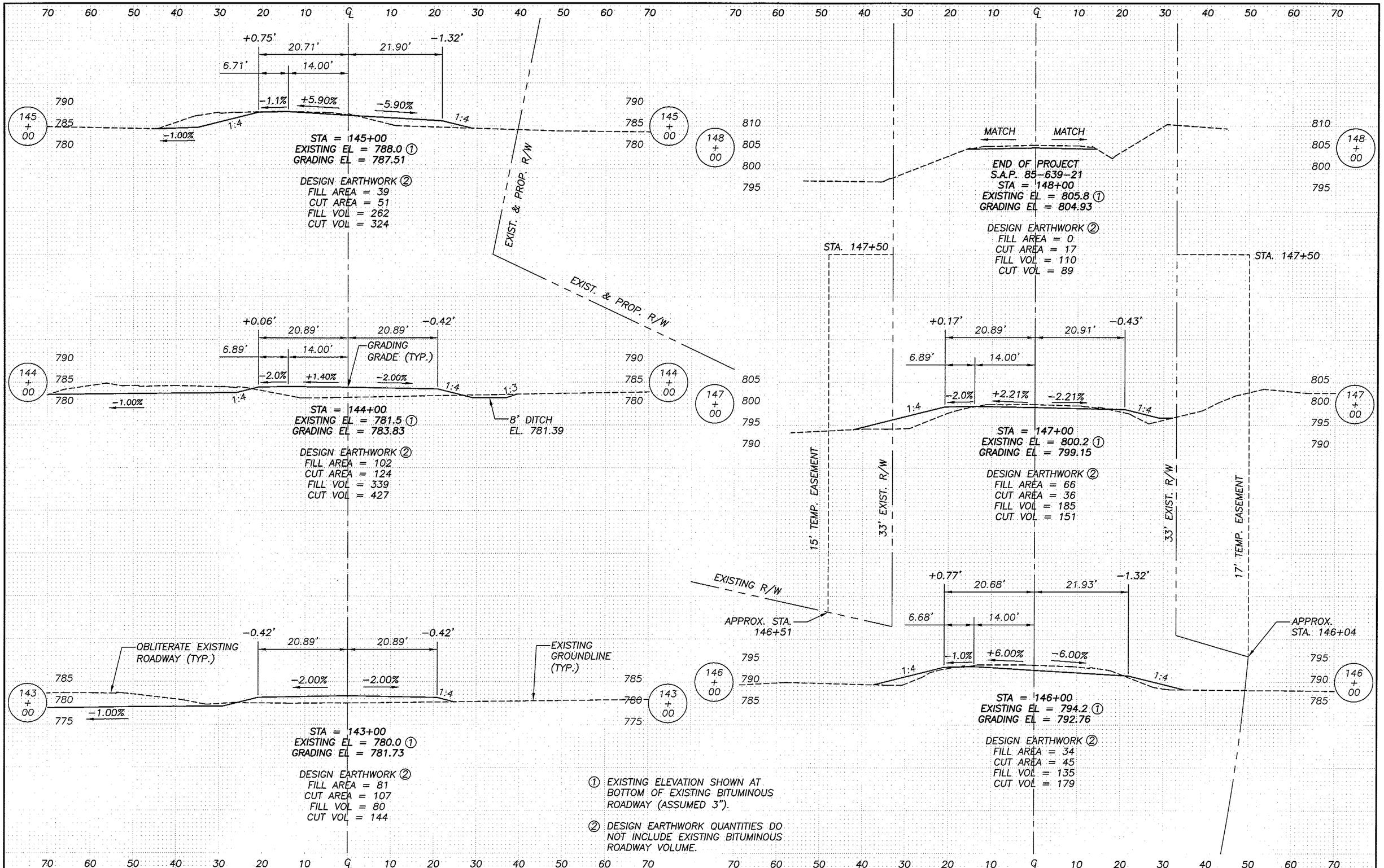

① EXISTING ELEVATION SHOWN AT BOTTOM OF EXISTING BITUMINOUS ROADWAY (ASSUMED 3").

② DESIGN EARTHWORK QUANTITIES DO NOT INCLUDE EXISTING BITUMINOUS ROADWAY VOLUME.

APPROVED:	DES.: TJW	DRN.: SUK	ROADWAY CROSS SECTIONS	S.A.P. 85-639-21	SHEET 37 OF 41 SHEETS	85565
	CHK.: DSP	CHK.: DSP				

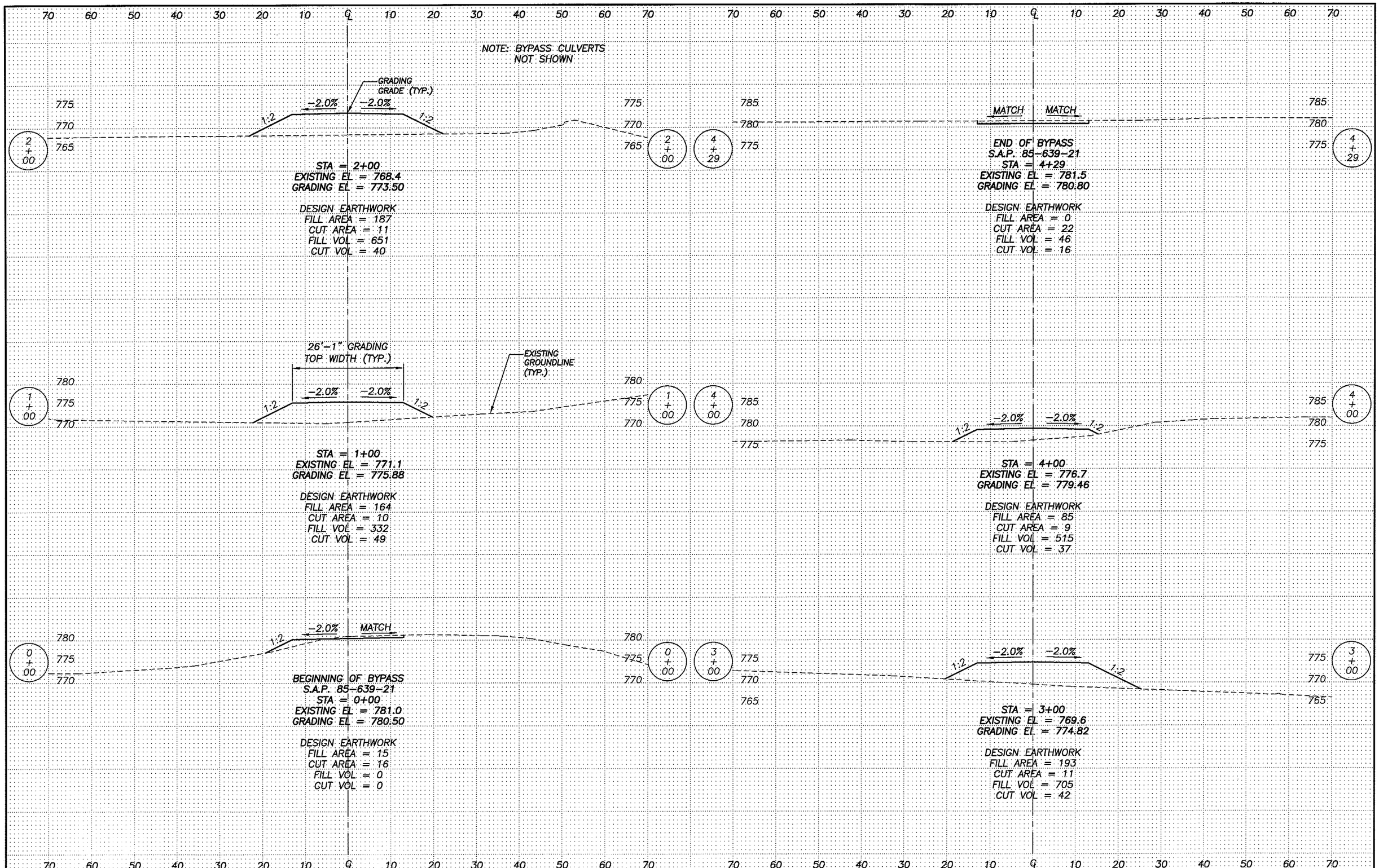

APPROVED:	DES.: TJW	DRN.: SUK	ROADWAY CROSS SECTIONS	S.A.P. 85-639-21	SHEET 38 OF 41 SHEETS	85565
	CHK.: DSP	CHK.: DSP				

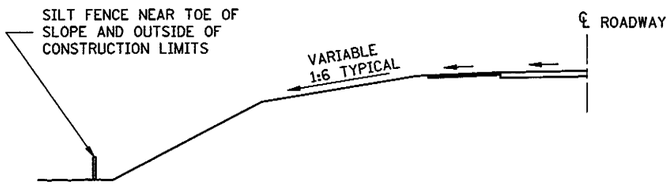

LOCATION OF SILT FENCE
AT TOE OF ROADWAY EMBANKMENT

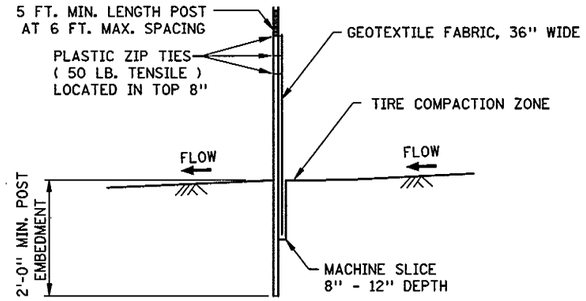

SILT FENCE, MACHINE SLICED
DESIGN GUIDELINES:
TO PROTECT AREAS FROM SHEET FLOW.
MAXIMUM CONTRIBUTING AREA: 1 ACRE.

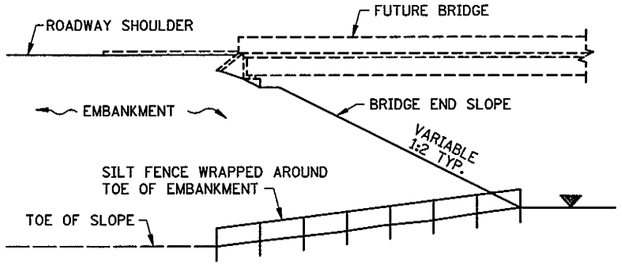

BRIDGE FILL

DESIGN GUIDELINES:
WATER COURSE FLOW VELOCITY: STAGNANT
CONTRIBUTING SLOPE AREA: 1/2 ACRE

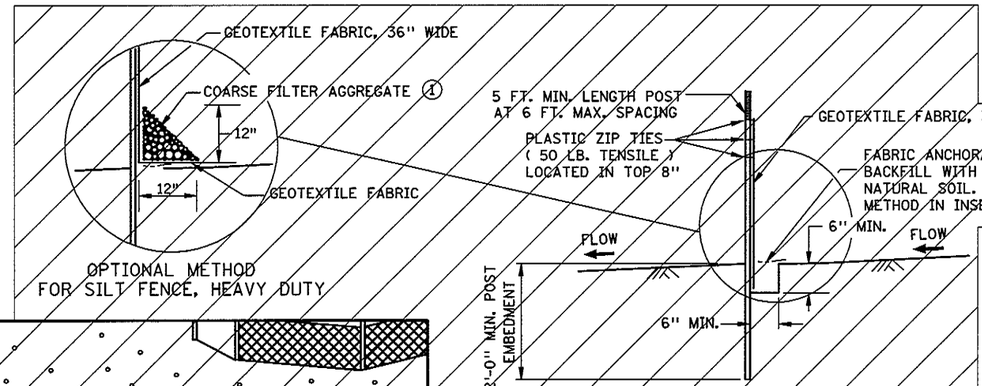

OPTIONAL METHOD
FOR SILT FENCE, HEAVY DUTY

SILT FENCE, HEAVY DUTY
(HAND INSTALLED)
DESIGN GUIDELINES:
TO PROTECT AREAS FROM SHEET FLOW.
MAXIMUM CONTRIBUTING AREA: 1 ACRE.

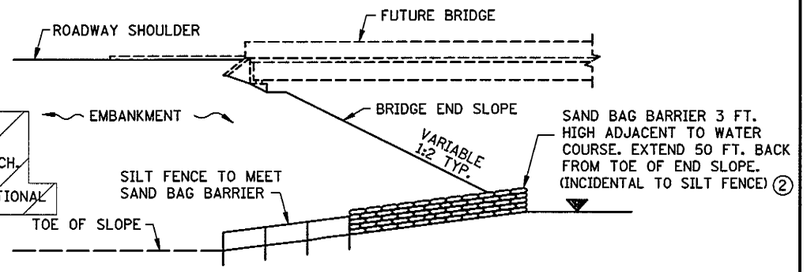

BRIDGE FILL

DESIGN GUIDELINES:
WATER COURSE FLOW VELOCITY: 1 TO 7 FT./SEC.
CONTRIBUTING SLOPE AREA: 1 ACRE

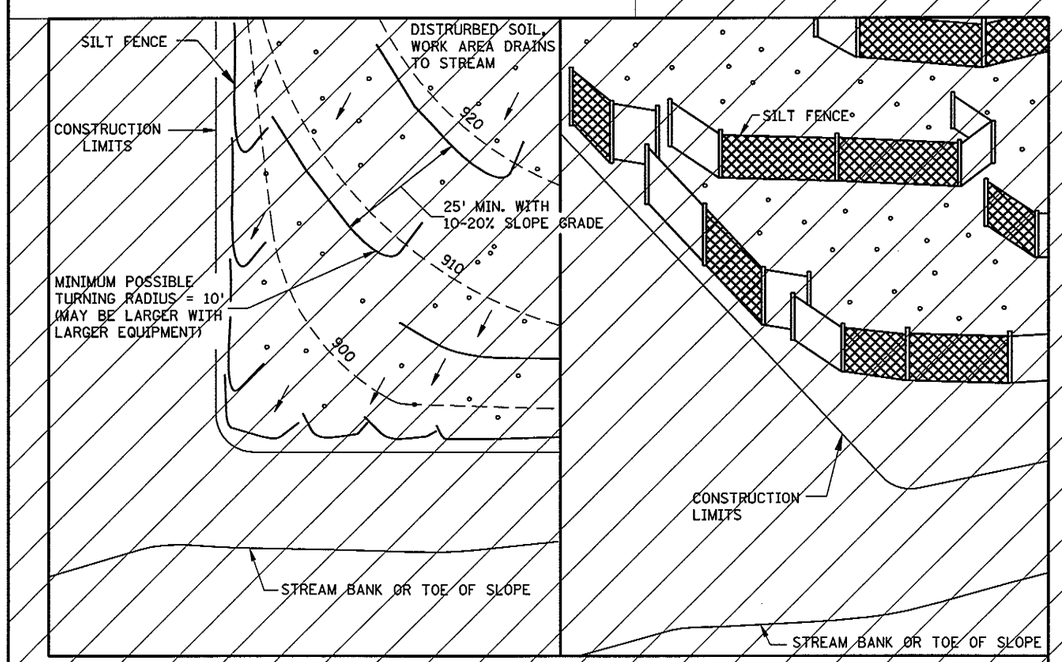

PLAN VIEW

SIDE VIEW

SILT FENCE, J-HOOK INSTALLATION

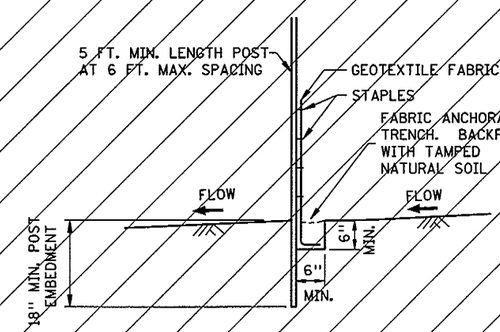

SILT FENCE, PREASSEMBLED
DESIGN GUIDELINES:
TO PROTECT AREAS FROM SHEET FLOW.
MAXIMUM CONTRIBUTING AREA: 1 ACRE.

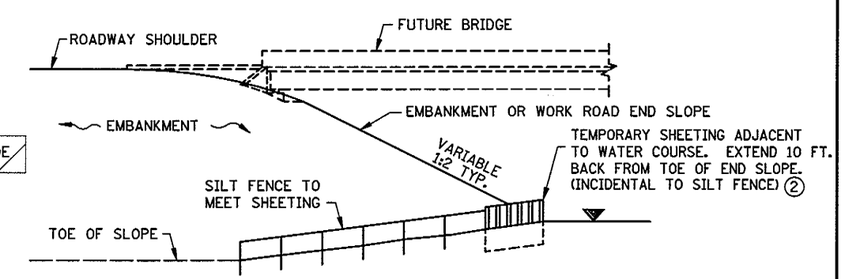

EMBANKMENT OR WORK ROAD FILL

DESIGN GUIDELINES:
WATER COURSE FLOW VELOCITY: 8 TO 15 FT./SEC.
CONTRIBUTING SLOPE AREA: 3 ACRES

SILT FENCE AT BRIDGE EMBANKMENT ADJACENT TO WATER

NOTES:

SEE SPECS. 2573, 3149 & 3886.

~~(1) COARSE FILTER AGGREGATE (SPEC. 3149) SHALL BE INCIDENTAL.~~

(2) DETAIL MODIFIED

CERTIFIED BY Thomas J. Wilson PROFESSIONAL ENGINEER/THOMAS J. WILSON	STANDARD SHEET NO. 5-297.408 MOD. (1 OF 2)	DES TJW	DRN SUK	TITLE: TEMPORARY SEDIMENT CONTROL SILT FENCE
	STANDARD APPROVED: SEPTEMBER 27, 2006	CHK DSP	CHK DSP	
LIC. NO. 21690 7-15- 2008	STATE AID PROJ. NO. 85-639-21	SHEET NO. 39 OF 41 SHEETS		85565

TRAFFIC CONTROL DEVICES

	ITEM	DESIGN NUMBER	F&I BY CONTRACTOR	SIZE	REMARKS
*	BARRICADES, TYPE III		6		
	FLASHERS (TYPE A)		13		
	RETROREFLECTIVE DRUM		8		
	BYPASS	M4-2	2	24" x 12"	LETTERING ~ BLACK ON WHITE
	ARROW	M6-1	2	21" x 15"	LETTERING ~ BLACK ON ORANGE
	BRIDGE CLOSED	R11-2A	2	48" x 30"	LETTERING ~ BLACK ON WHITE
	END ROAD WORK	G20-2A	2	48" x 24"	LETTERING ~ BLACK ON ORANGE
	ARROW	W1-6	4	48" x 24"	LETTERING ~ BLACK ON ORANGE
	20 MPH	W13-1	1	24" x 24"	LETTERING ~ BLACK ON ORANGE
	BYPASS AHEAD	W20-X6	1	48" x 48"	LETTERING ~ BLACK ON ORANGE
(1)	ORANGE SAFETY FENCE				

* REFLECTORIZE BOTH SIDES.

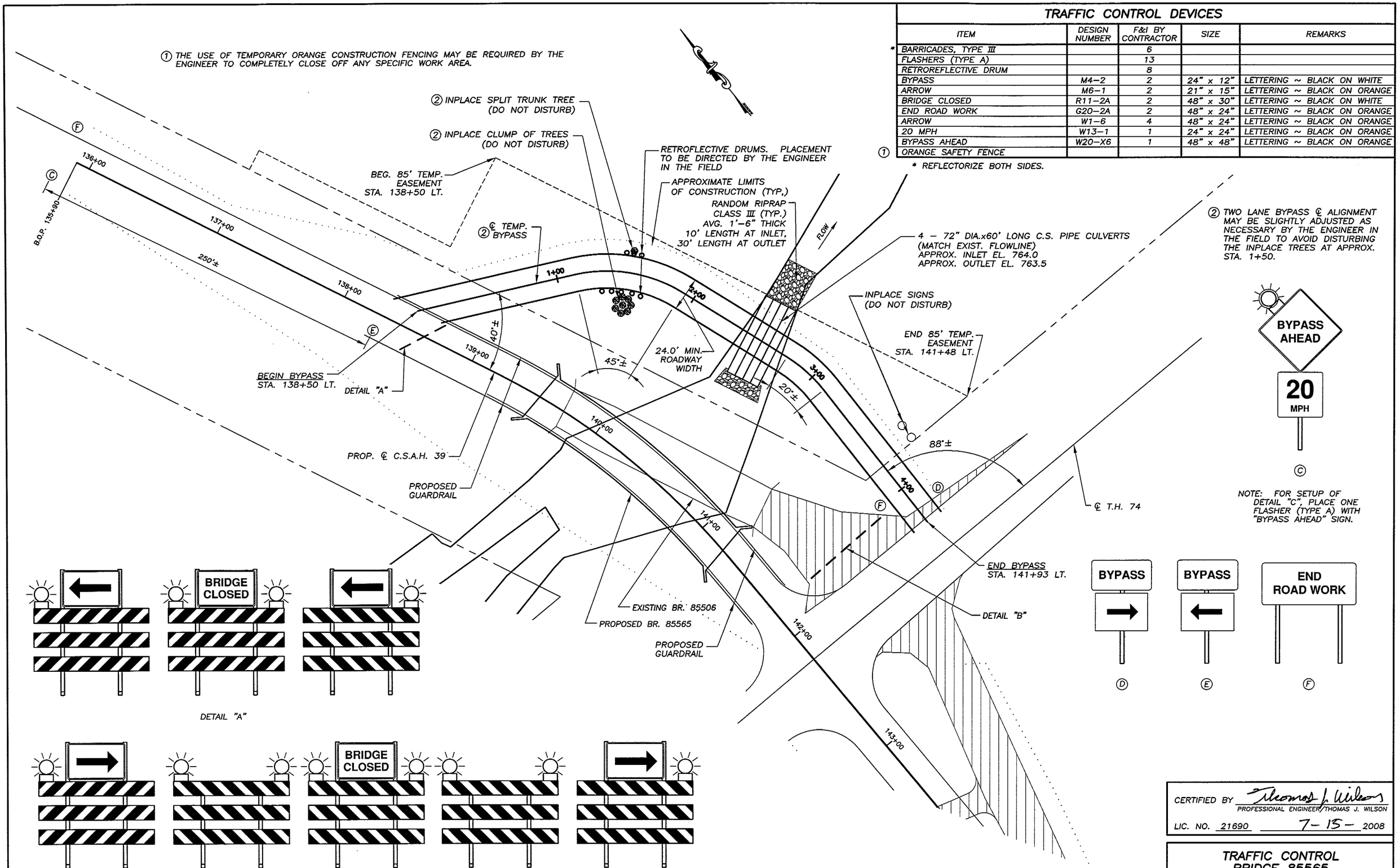

TWO LANE BYPASS AND SIGNING PLAN

(NOT TO SCALE)

CERTIFIED BY Thomas J. Wilson
PROFESSIONAL ENGINEER/THOMAS J. WILSON
LIC. NO. 21690 7-15-2008

TRAFFIC CONTROL
BRIDGE 85565

S.A.P. 85-639-21	DES.: TJW	DRN.: SUK
SHEET 40 OF 41 SHEETS	CHK.: DSP	CHK.: DSP

TWO LANE BYPASS NOTES

TWO LANE BYPASS SHALL INCLUDE, BUT NOT BE LIMITED TO, CONSTRUCTION, MAINTENANCE, AND REMOVAL OF A TEMPORARY ROAD CONNECTION DOWNSTREAM OF THE EXISTING BRIDGE. THE TEMPORARY ROAD SHALL CONSIST OF A MINIMUM 24' WIDE GRAVEL TOP WITH A MINIMUM COVER OF 2' (AT SHOULDER) OVER C.S. PIPE CULVERT. CULVERT SHALL CONSIST OF 4 LINES OF 72"ø×60' LONG C.S. PIPE CULVERTS (MATCH EXISTING FLOWLINE). ALL WORK SHALL BE PERFORMED UNDER THE DIRECTION AND APPROVAL OF THE ENGINEER IN THE FIELD, INCLUDING ADJUSTMENTS AS NEEDED TO ACCOMMODATE POTENTIAL SETTLING OF THE TEMPORARY EMBANKMENT AND CULVERTS. WORK SHALL ALSO INCLUDE EXCAVATION FOR TEMPORARY STREAM CHANNEL.

TWO LANE BYPASS ℄ ALIGNMENT MAY BE SLIGHTLY ADJUSTED AS NECESSARY BY THE ENGINEER IN THE FIELD TO AVOID DISTURBING THE INPLACE TREES AT APPROX. STA. 1+50.

PROTECTION AND RESTORATION OF ALL EXISTING CAMPGROUND ELECTRICAL CONNECTIONS SHALL BE CONSIDERED INCIDENTAL TO THE TWO LANE BYPASS AND PERFORMED BY THE CONTRACTOR AS APPROVED BY THE ENGINEER IN THE FIELD.

TWO LANE BYPASS SHALL BE INPLACE PREVIOUS TO BRIDGE REMOVAL.

TWO LANE BYPASS SHALL BE REMOVED AND THE AREA RESTORED TO THE ORIGINAL CONDITION TO THE SATISFACTION OF THE ENGINEER WHEN NEW BRIDGE IS OPENED TO TRAFFIC.

TRAFFIC SHALL BE MAINTAINED THROUGH PROJECT AT ALL TIMES.

TURF ESTABLISHMENT SHALL BE ESTABLISHED IMMEDIATELY FOLLOWING REMOVAL OF TWO LANE BYPASS.

SEE SHEET 33 FOR APPROXIMATE QUANTITIES.

UPON REMOVAL OF THE BYPASS, THE 72" C.S. PIPE CULVERTS SHALL BECOME THE CONTRACTOR'S PROPERTY.

ALL COST INCURRED FOR MATERIALS, INSTALLATION, MAINTENANCE, AND REMOVAL OF TWO LANE BYPASS AS SHOWN ON THIS SHEET AND RELATED WORK DURING CONSTRUCTION SHALL BE INCLUDED IN PRICE BID FOR ITEM "TWO LANE BYPASS" (ALSO SEE SHEET 33).

NOTES

EXISTING ACCESS TO RESIDENCES SHALL BE MAINTAINED THROUGHOUT THE PROJECT DURATION.

ALL COST INCURRED FOR MATERIALS, INSTALLATION, MAINTENANCE AND REMOVAL OF TRAFFIC CONTROL DEVICES AS SHOWN ON THIS SHEET AND RELATED WORK DURING CONSTRUCTION SHALL BE INCLUDED IN PRICE BID FOR ITEM "TRAFFIC CONTROL".

ALL TRAFFIC CONTROL DEVICES SHALL CONFORM TO THE MN M.U.T.C.D., DATED MAY 2005, AND TEMPORARY TRAFFIC CONTROL ZONE LAYOUTS (FIELD MANUAL) DATED JANUARY 2007.

BARRICADE PLACEMENT TO BE DETERMINED IN THE FIELD SO AS NOT TO OBSTRUCT VISION TO OR FROM ROADWAY ENTRANCES.

EXACT LOCATION OF TRAFFIC CONTROL DEVICES TO BE DETERMINED BY THE ENGINEER IN THE FIELD.

THE CONTRACTOR SHALL REMOVE, SALVAGE OR COVER AND RESTORE AS APPROPRIATE, ALL EXISTING SIGNING THAT CONFLICTS WITH THIS TRAFFIC CONTROL PLAN TO THE SATISFACTION OF THE ENGINEER.

ALL INSTALLATIONS REQUIRING POSTS SHALL BE A "U" CHANNEL TYPE. MINIMUM WEIGHT PER FOOT – 2.75 lbs.

ALL TRAFFIC CONTROL DEVICES SHALL HAVE RETROREFLECTIVE SHEETING.

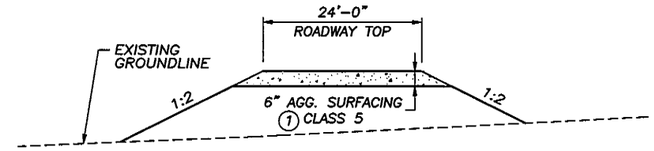

TYPICAL SECTION THRU BYPASS

(NOT TO SCALE)

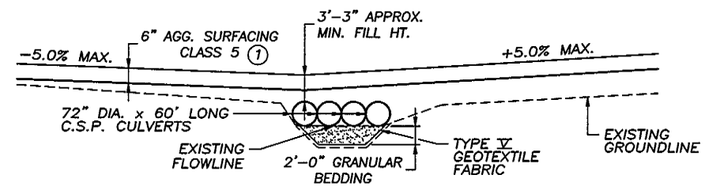

TRANSVERSE SECTION THRU BYPASS AT CULVERT

(NOT TO SCALE)

(1) EXTENDS ENTIRE LENGTH OF BYPASS.

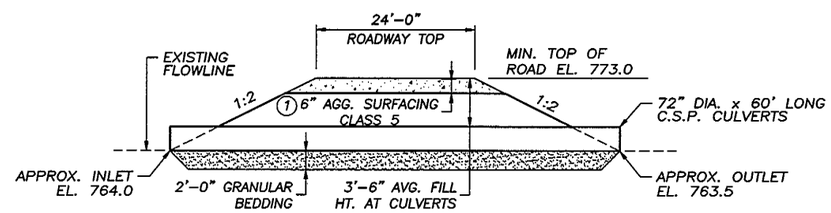

LONGITUDINAL SECTION THRU BYPASS AT CULVERT

(NOT TO SCALE)

CERTIFIED BY Thomas J. Wilson
PROFESSIONAL ENGINEER THOMAS J. WILSON
LIC. NO. 21690 7-15- 2008

TRAFFIC CONTROL
BRIDGE 85565

S.A.P. 85–639–21	DES.: TJW	DRN.: SUK
SHEET 41 OF 41 SHEETS	CHK.: DSP	CHK.: DSP